Bath & Shower Faucet

American Standard

FFASB236-7T9500BT0

Codie

Codie Concealed Shower Mono W/o Handspray-Thailand

STYLE SEGMENT

- Contemporary

KEY SPECIFICATIONS

- Product Description: Codie™ Concealed Shower Mono
- Bathroom Faucet Type: Concealed Shower
- Colour: Chrome
- Hand Shower Included: No
- Flow Rate: Without Shower: 13.92



SHIPPING WEIGHT

- Net Weight: Contact us for more information
- Gross Weight: Contact us for more information

KEY TECHNOLOGIES AND FEATURES

HYGIENE

- Complies with American Standard Quality Standards

COMFORT

- Complies with American Standard Quality Standards

CONVENIENCE

- Complies with American Standard Quality Standards

DURABILITY

- Durashine

SUSTAINABILITY

- Complies with American Standard Quality Standards

SAFETY

- Complies with American Standard Quality Standards

OTHERS

- NIL

STANDARDS AND CERTIFICATIONS

- GB 18145-2014
- TIS 2067-2552

Bath & Shower Faucet

American Standard

FFASB236-7T9500BT0

Codie

Codie Concealed Shower Mono W/o Handspray-Thailand

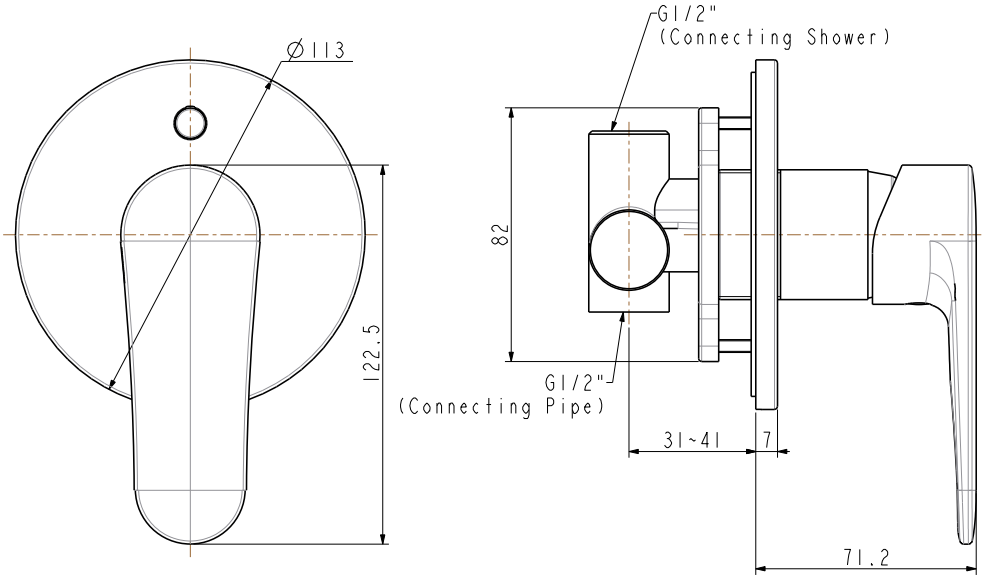

Bath & Shower Faucet

American Standard

FFASB236-7T9500BT0

Codie

Codie Concealed Shower Mono W/o Handspray-Thailand

Product	Description	Codie™ Concealed Shower Mono
	Weight (kg)	0.97
	Dimensions (mm)	180 x 114 x 110
	Finish	Chrome
	Flow Rate	Without Shower: 13.92
	Mounting Location	Wall Mount
Material & Color	Material	Brass
	Color	Chrome
Bathroom Faucet	Type	Concealed Shower
Faucet	Type	Mono
Connection	Size (mm)	DN15
	Size (inches)	G1/2
Handle	Material	N/A
	Type	Lever
	No. of Handles	1

Bath & Shower Faucet

American Standard

FFASB236-7T9500BT0

Codie

Codie Concealed Shower Mono W/o Handspray-Thailand

Components	Hand Shower Included	No
	Included	N/A
	Excluded	N/A
Installation	Number of Holes Required	1
Valve	Type	Ceramic