Bath & Shower Faucet

American Standard

FFASB211-6T1501BT0

Codie

Codie Exposed Bath & Shower Mixer Without Shower Kit

STYLE SEGMENT

- Contact us for more information

KEY SPECIFICATIONS

- Product Description: Codie Exposed Bath & Shower Mixer Without Shower Kit
- Bathroom Faucet Type: Bath & Shower
- Colour: Chrome
- Hand Shower Included: No
- Flow Rate: Without Hand Shower: 12.3 , With Spout: 10.56



SHIPPING WEIGHT

- Net Weight: Contact us for more information
- Gross Weight: Contact us for more information

KEY TECHNOLOGIES AND FEATURES

HYGIENE

- Complies with American Standard Quality Standards

COMFORT

- Complies with American Standard Quality Standards

CONVENIENCE

- Complies with American Standard Quality Standards

DURABILITY

- Durashine

SUSTAINABILITY

- Complies with American Standard Quality Standards

SAFETY

- Complies with American Standard Quality Standards

OTHERS

- NIL

STANDARDS AND CERTIFICATIONS

- GB 18145-2014
- TIS 2067-2552

Bath & Shower Faucet

American Standard

FFASB211-6T1501BT0

Codie

Codie Exposed Bath & Shower Mixer Without Shower Kit

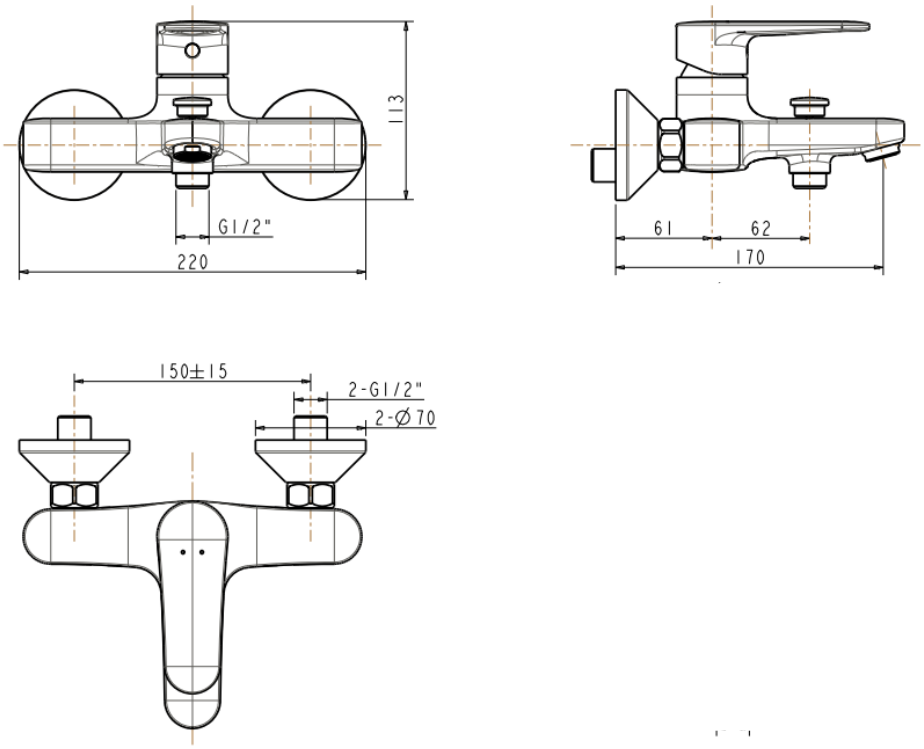

Bath & Shower Faucet

American Standard

FFASB211-6T1501BT0

Codie

Codie Exposed Bath & Shower Mixer Without Shower Kit

Product	Description	Codie Exposed Bath & Shower Mixer Without Shower Kit
	Weight (kg)	2.08
	Dimensions (mm)	Contact us for more information
	Finish	Chrome
	Flow Rate	Without Hand Shower: 12.3 , With Spout: 10.56
	Mounting Location	Wall Mount
Material & Color	Material	Brass
	Color	Chrome
Bathroom Faucet	Type	Bath & Shower
Faucet	Type	Mixer
Connection	Size (mm)	DN15
	Size (inches)	G1/2
Handle	Material	Contact us for more information
	Type	Lever
	No. of Handles	1

Bath & Shower Faucet

American Standard

FFASB211-6T1501BT0

Codie

Codie Exposed Bath & Shower Mixer Without Shower Kit

Components	Hand Shower Included	No
	Included	Contact us for more information
	Excluded	Contact us for more information
Installation	Number of Holes Required	2
Valve	Type	Ceramic