Wash Basin

American Standard

CL0979I-6DAB

Winston

Winston WH lavatory w/part WT

STYLE SEGMENT

- Contemporary

KEY SPECIFICATIONS

- Installation Type: Wall Hung
- Product Dimensions: 460x506x191
- Material: Vitreous China
- Color: White Heat II
- Overflow Hole: With
- Faucet Ledge: Yes
- Included Components: Concept



SHIPPING WEIGHT

- Net Weight: 12.16
- Gross Weight: 13.88

KEY TECHNOLOGIES AND FEATURES

HYGIENE

- Complies with American Standard Quality Standards

COMFORT

- Complies with American Standard Quality Standards

CONVENIENCE

- Complies with American Standard Quality Standards

DURABILITY

- Complies with American Standard Quality Standards

SUSTAINABILITY

- Complies with American Standard Quality Standards

SAFETY

- Complies with American Standard Quality Standards

OTHERS

- NIL

STANDARDS AND CERTIFICATIONS

- TIS 791-2565

Wash Basin

American Standard

CL0979I-6DAB

Winston

Winston WH lavatory w/part WT

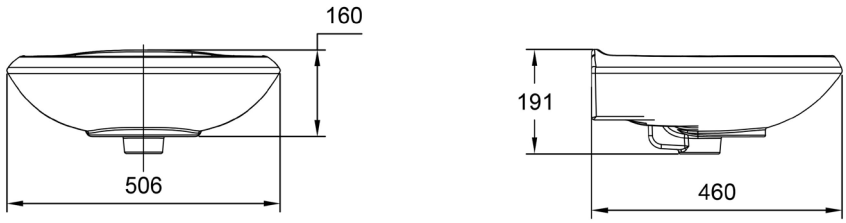

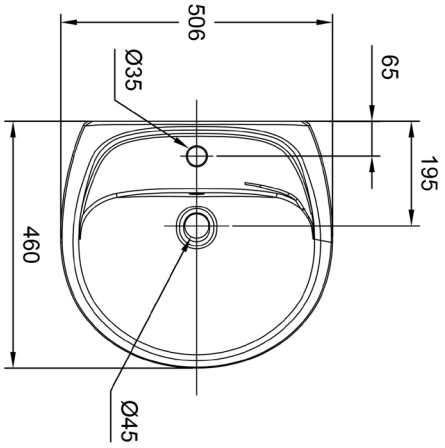

Wash Basin

American Standard

CL0979I-6DAB

Winston

Winston WH lavatory w/part WT

Item	Description	Winston WH lavatory w/part WT
Installations	Type	Wall Hung
Dimensions	Product (mm)	460x506x191
Material & Color	Material	Vitreous China
	Color	White Heat II
Features	Overflow Hole	With
	Faucet Ledge	Yes
Components	Included	Concept
Shipping	Net Weight (kg)	12.16
	Gross Weight (kg)	13.88
	Product Weight (kg)	12.16
	Dimensions (mm)	555x500x285