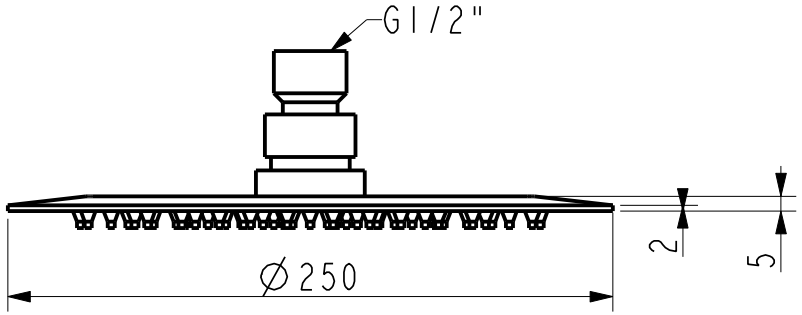
G1/2"
∅250
2
5

