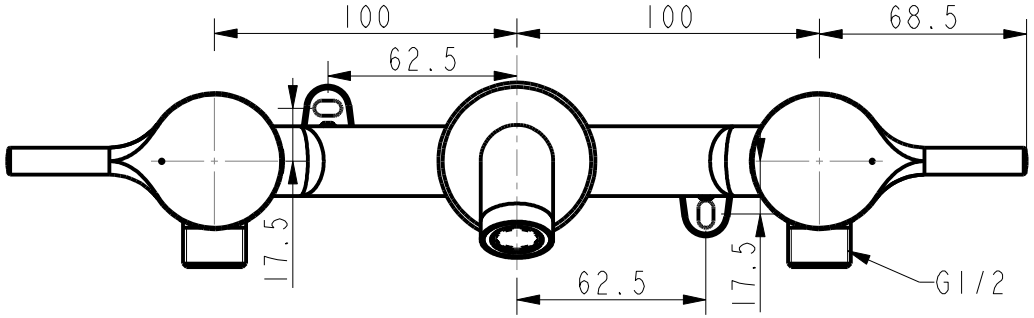
100
100
68.5
62.5
17.5
62.5
17.5
G1/2

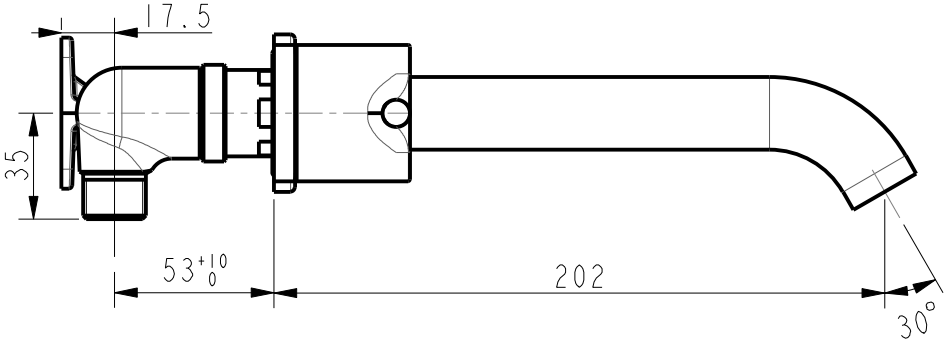
17.5
35
53+10 0
202
30°

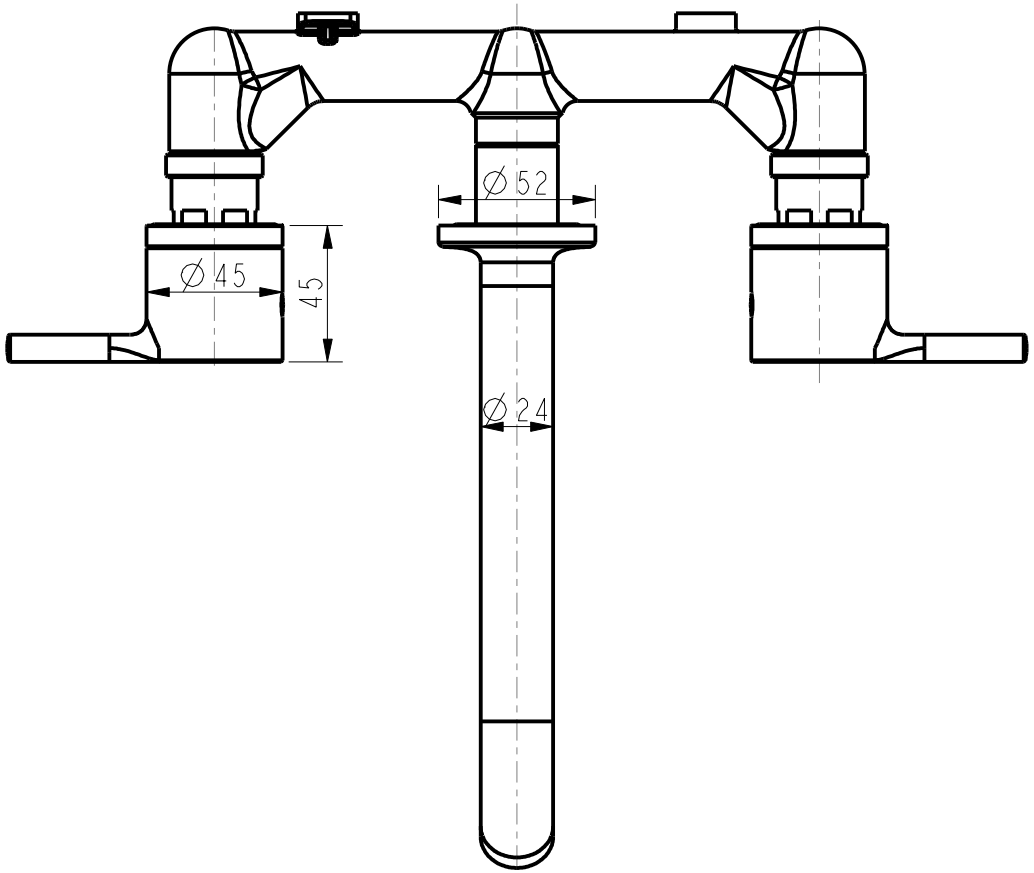
Ø52
Ø45
45
Ø24

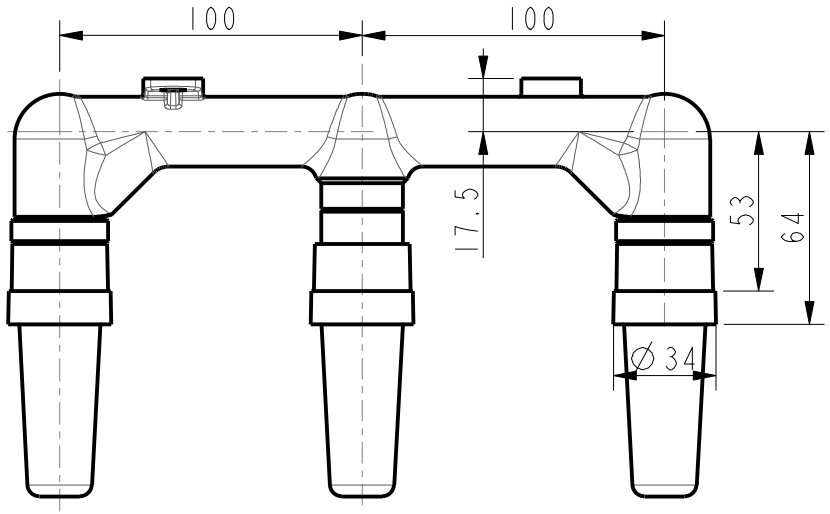
100
100
17.5
53
64
Ø34