Care & Maintenance

Repairing

* When you repair the faucet, you need to shut off water supply.

Cleaning the surface of faucet

* Rinse the product with clean water.
* Dry with soft cotton flannel cloth.
* Do not clean the product with acid, polish, abrasives, harsh cleaners, or cloth with a harsh surface as these products may damage the finish.

If you want to do the maintenance for the faucet, please follow the below process.

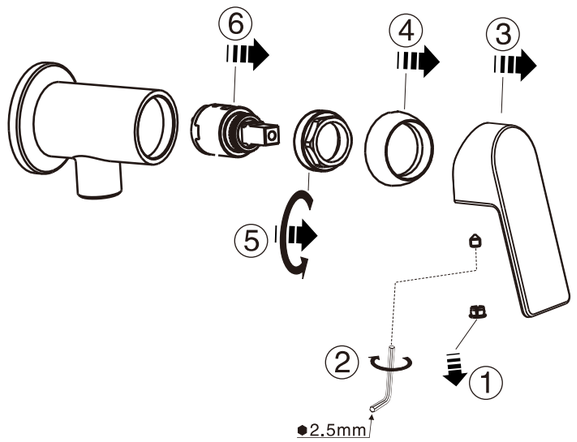



Attention:
Please leave manual with customer post installation.

A-J54-10
(FFASTJ54-7T1500BT0)
Lift Exposed Mono Shower

A-J56-10
(FFASTJ56-7T1500BT0)
Arc Exposed Mono Shower

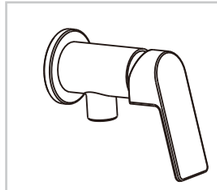
A–J54–10

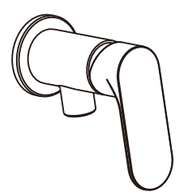
A–J56–10

American Standard

Installation & Operation Instructions

Thank you for selecting American Standard the benchmark of fine quality for over 100 years.
To ensure that your installation proceeds smoothly, please read these instructions carefully before you begin.

* American Standard continually improves our product design and performance and reserves the right to modify the dimension and specification of our product accordingly without any prior notification.
* Actual dimensions and specifications may vary, refer to physical product for exact dimensions and specification.

Pre–Installation Checks

*Remove all impurity in pipes in order to avoid clogging before installation.
*Check installation dimensions in order to install it correctly.

Conditions for usage

* Recommended water pressure: 0.1~0.5Mpa.
* Environment Temperature:1~55℃
* Steam is not allowed.

During installation of the faucet, Please grab the body. Do not grab handle only.

Recommended Tools and Materials


Adjustable Wrench


Tape Measure


Teflon Tape


Pencil

Dimension

A–J54–10

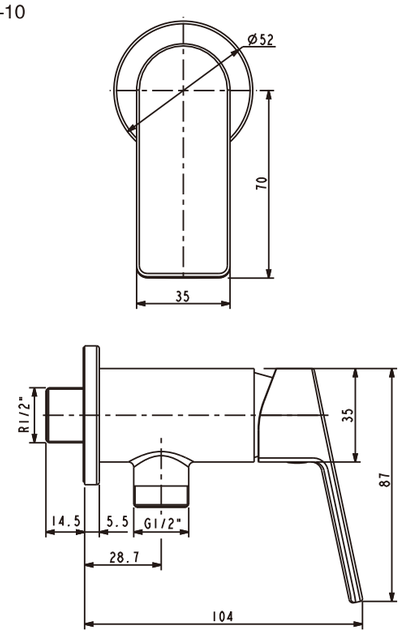

A–J56–10

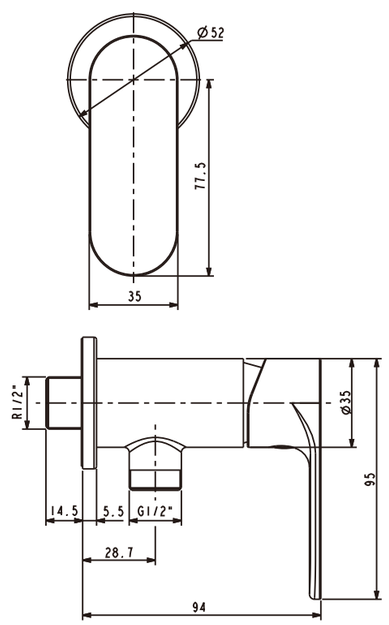

Rev. FF1-CN521K00489099/A0

Parts List

A–J54–10

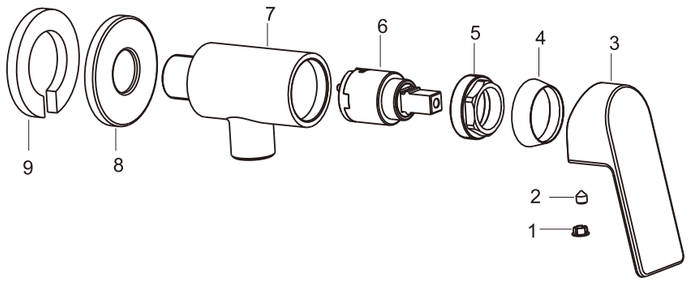

Parts List		
No.	Part Name	Q'ty
1	Index Button	1
2	Screw	1
3	Handle	1
4	Cap	1
5	Nut	1
6	Cartridge	1
7	Body	1
8	Escutcheon	1
9	Washer	1

A–J56–10

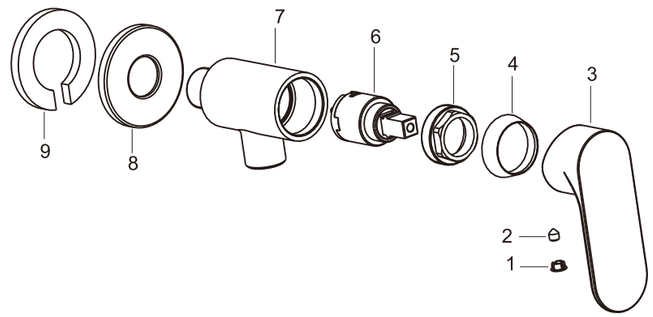

Parts List		
No.	Part Name	Q'ty
1	Index Button	1
2	Screw	1
3	Handle	1
4	Cap	1
5	Nut	1
6	Cartridge	1
7	Body	1
8	Escutcheon	1
9	Washer	1

Installation

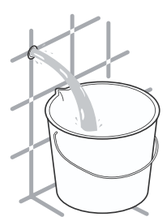

1

* Consult the dimension drawing and lay the pipes.
* Wash and clean the water supply pipeline.

Installation

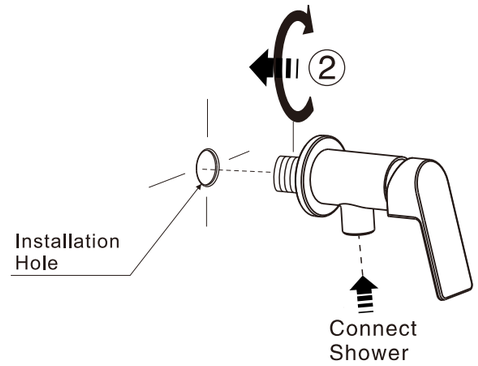

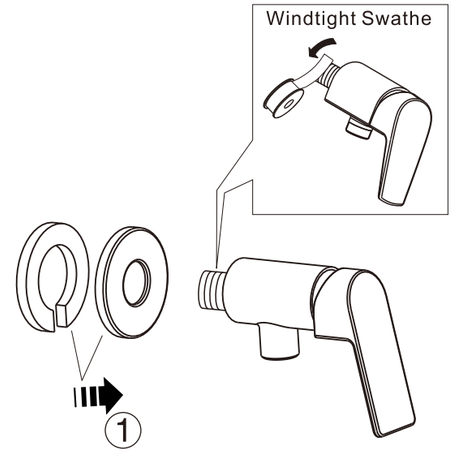

Test / Usage

1 Test

* Turn handle to “OFF” position. Open Water supply valve to check all connections for leakage;
* Turn handle to “ON” position. Check the water flow .

2 Usage

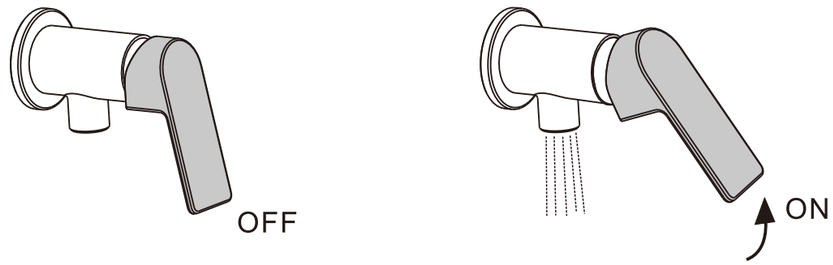

Trouble Shooting Guide

Trouble	Checkpoint	Contents	Action
Poor flow rate	Shower	Check any impurities.	Remove all impurities.
	Water Supply valve	Check water supply valve open position.	Open water supply valve to increase flowrate
Leakage	Cartridge	Check cartridge packing.	When packing is damaged, replace the cartridge.
Deviant Temperature	Water Supply Valve	Check water supply valve open position.	Open water supply valve to increase flowrate
	Water Supply System	Check if the supply pipe connected correct or not	Connect the hot and cold water pipe correctly