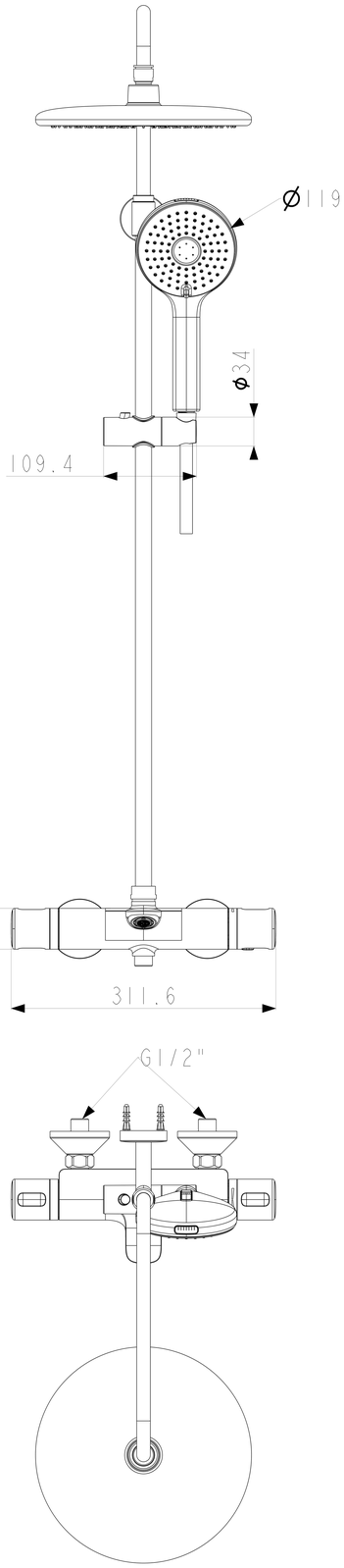
Ø119
Ø34
109.4
Ø48
311.6
G1/2"

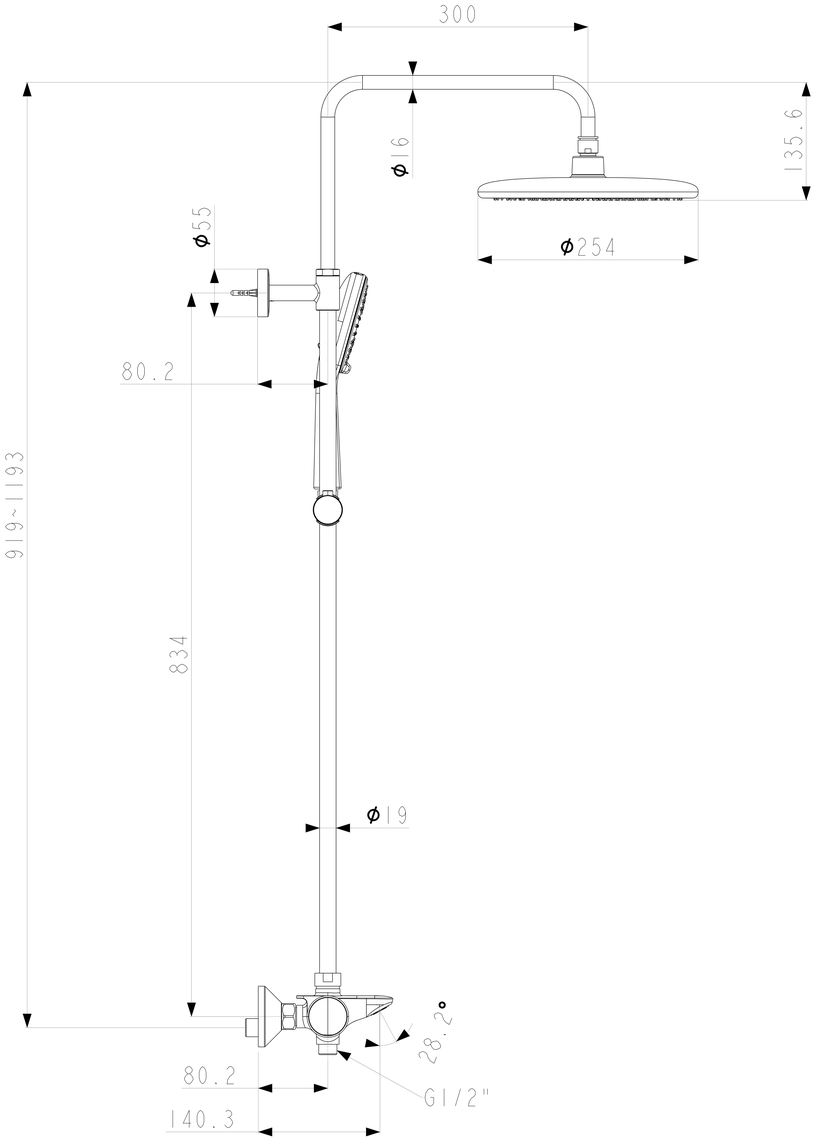
300
Ø16
135.6
Ø55
Ø254
80.2
919~1193
834
Ø19
28.2°
80.2
140.3
G1/2"