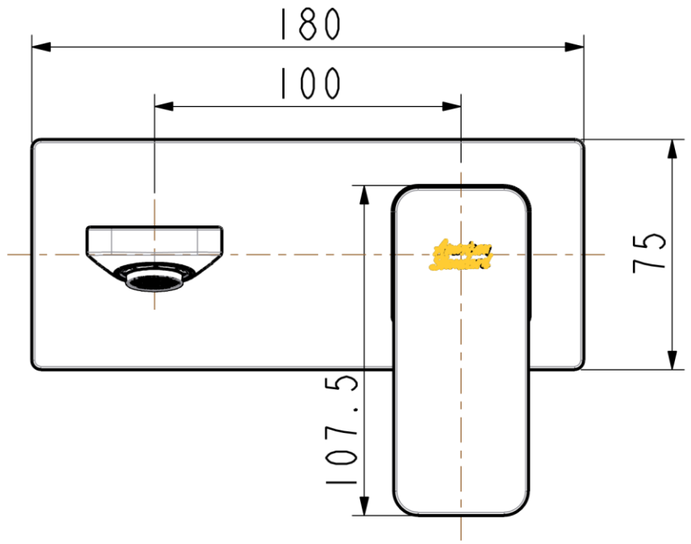

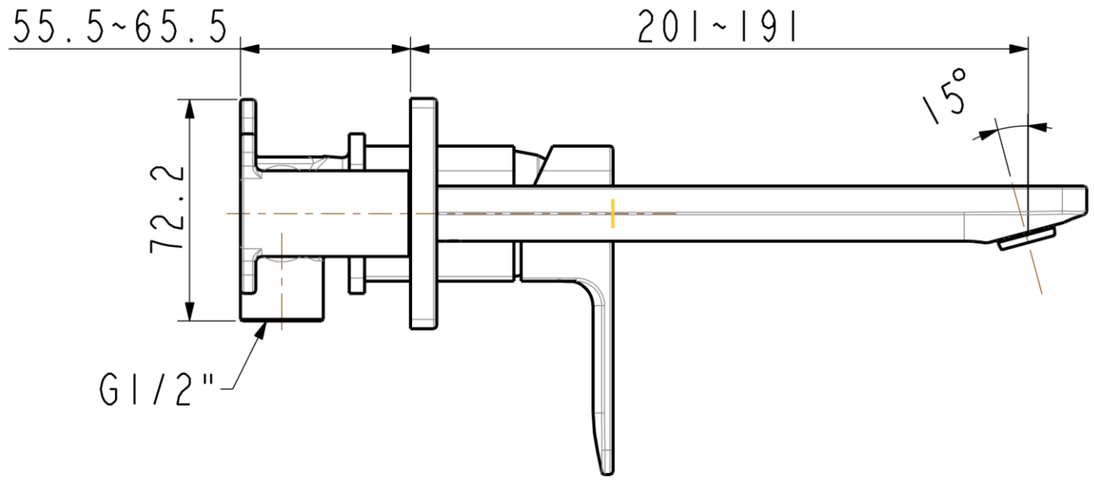

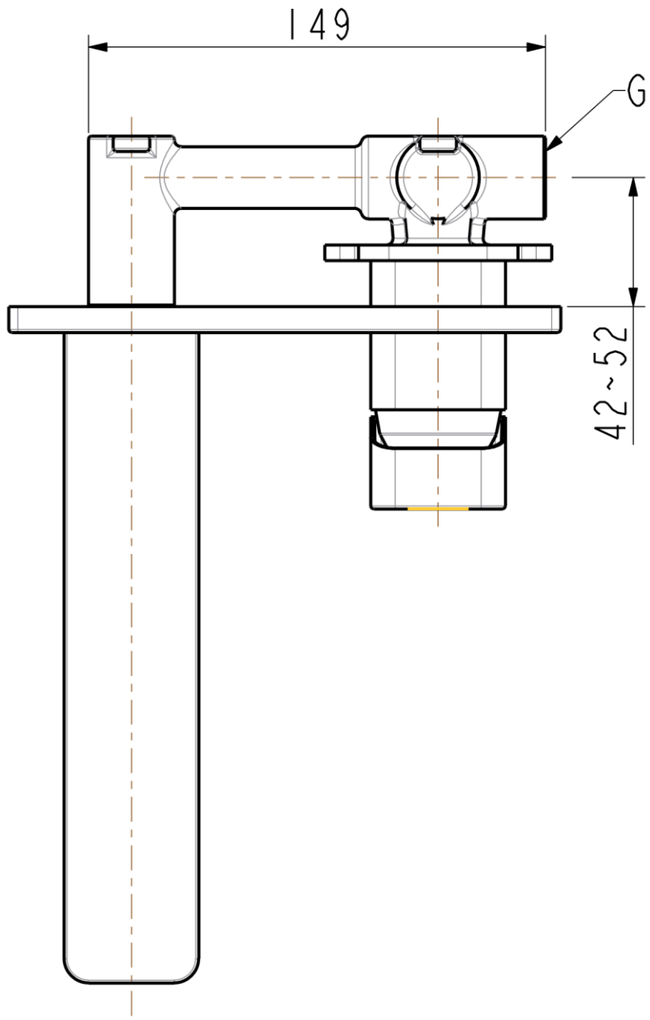

In-wall Assembly

