Tolerance, Unless Otherwise Stated. Is	
Above 0.5 to and including 6	±0.1
Excess 6 to and including 30	±0.2
Excess 30 to and including 120	±0.3
Excess 120 to and including 315	±0.5
Excess 315 to and including 1000	±0.8
Excess 1000 to and including 2000	±1.2

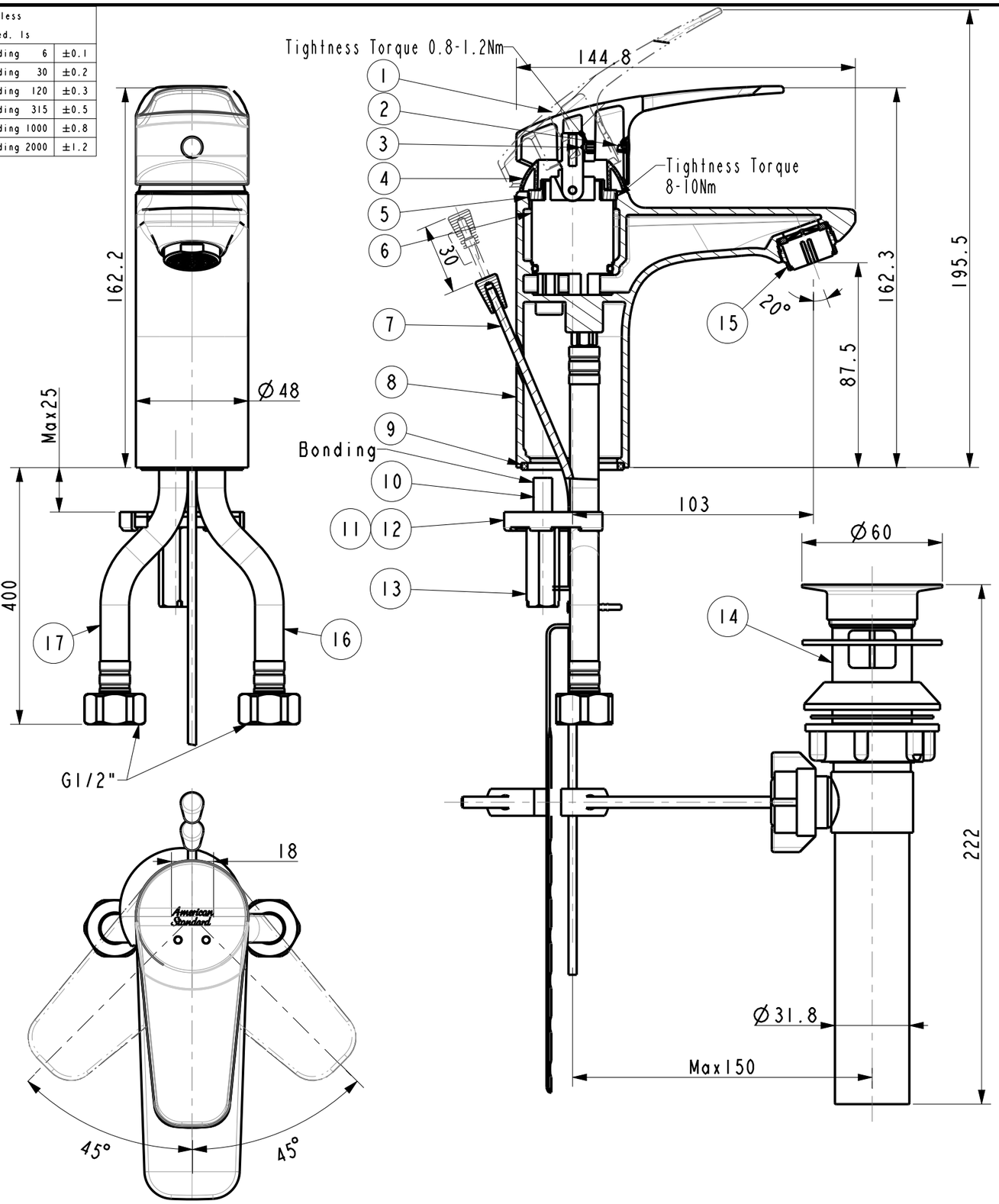

No.	Part No.	Part Name	QTY	Material	Finish
17	FF1-CN521T00000017	Flexible Hose (Red)	1	Assembly	
16	FF1-CN521T00000018	Flexible Hose (Blue)	1	Assembly	
15	FF1-CN521A00000043	M24X1 Aerator	1	Assembly	
14	FF1-CN521X00004650	Pop-up Drain	1	Assembly	
13	FF1-CN521N00000073	Lock Nut	1	Hpb59-1	
12	FF1-CN521G00000238	Rubber Washer	1	NBR70	
11	FF1-CN521J00000432	Fix plate	1	Q235	
10	FF1-CN521Z00000438	Bolt M8	1	SUS304	
9	FF1-CN521G00000067	Washer	1	NBR70	
8	FFZZ0901-10150BDPL	Body	1	GkMs60Fk	Chrome
7	FF1-CN521Z00000300	Pop-up Rod	1	Hpb59-1	Chrome
6	FF1-CN521C00000018	35# H Cartridge	1	Assembly	
5	FF1-CN521N00000091	Cartridge Lock Nut	1	Hpb59-1	
4	FF1-CN521F00000026	Cartridge Cover	1	ABS	Chrome
3	FF1-CN521N00000228	Screw M5*6	1	SUS304	
2	FF1-CN521Z00000086	Indicator	1	ABS	
1	FF1-CN521L00000046	Handle	1	ZZnA14-1	Chrome

DESIGNED			TITLE
CHECKED			REF Milano SH Basin Mixer
APPROVED			
SCALE	MATERIAL	WEIGHT	DWG NO.
1:2	Assem		FFAS0901-101500BF0

American Standard

REV	DESCRIPTION	DATE	NAME