Test / Usage

1 Test

* Turn handle to “OFF” position. Open Water supply valve to check all connections for leakage;
* Turn handle to “ON” position. Check the water flow .

2 Usage

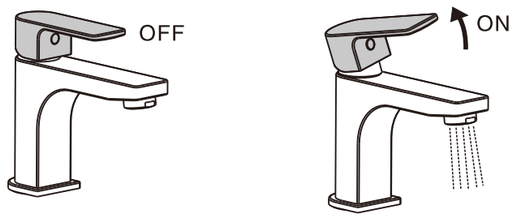

Trouble Shooting Guide

Trouble	Checkpoint	Contents	Action
Poor flow rate	Aerator	Check any impurities.	Remove all impurities.
	Water Supply valve	Check water supply valve open position.	Open it to full water supply valve
	Flexible Hose	Check if flexible hose is twisted.	Untwist the flexible hose.
Leakage	Cartridge	Check cartridge packing.	When packing is damaged, replace the cartridge.
	Flexible Hose Connection	Check if the packing is losed. Check if the connection become loosen	Check the existence of packing and fix it again

Care & Maintenance

* If you want to do the maintenance for the faucet, please follow the below process.

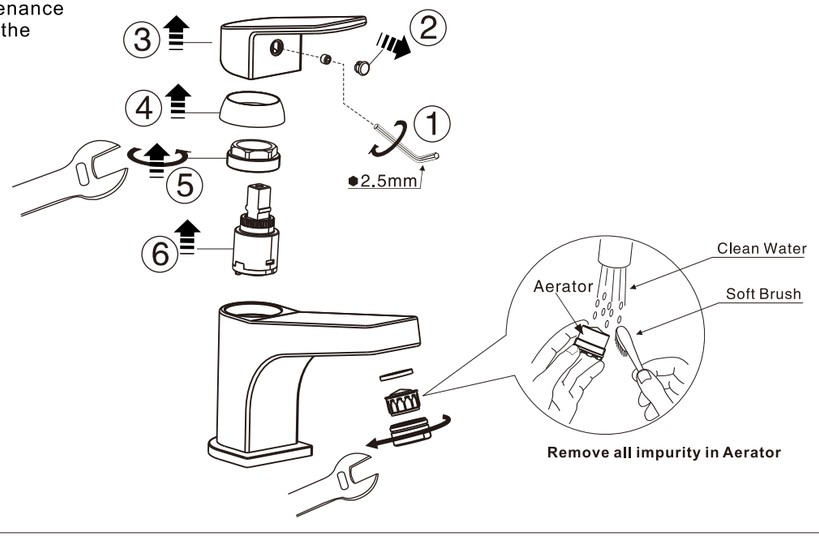



Attention:
Please leave manual with customer post installation.

A-J53-10
(FFASTJ53-1T1500BT0)
Lift Mono Basin Faucet
A-J55-10
(FFASTJ55-1T1500BT0)
Arc Mono Basin Faucet
A-J57-10
(FFASTJ57-1T1500BT0)
Loft Mono Basin Faucet

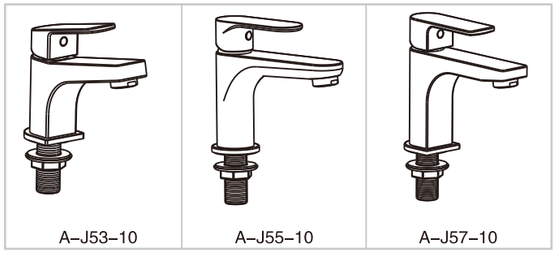

American Standard

Installation & Operation Instructions

Thank you for selecting American Standard the benchmark of fine quality for over 100 years.
To ensure that your installation proceeds smoothly, please read these instructions carefully before you begin.

* American Standard continually improves our product design and performance and reserves the right to modify the dimension and specification of our product accordingly without any prior notification.
* Actual dimensions and specifications may vary, refer to physical product for exact dimensions and specification.

Pre–Installation Checks

*Remove all impurity in pipes before beginning to avoid clogging. Connect faucet pipes correctly.
* Check installation the Dimension Drawing to ensure to install it correctly.

Conditions for use

* Recommended water pressure: 0.1~0.5Mpa.
* Environment Temperature:1~55℃
* Steam is not allowed.

During installation of the faucet, Please grab the body. Do not grab handle only.

Recommended Tools and Materials



Dimension

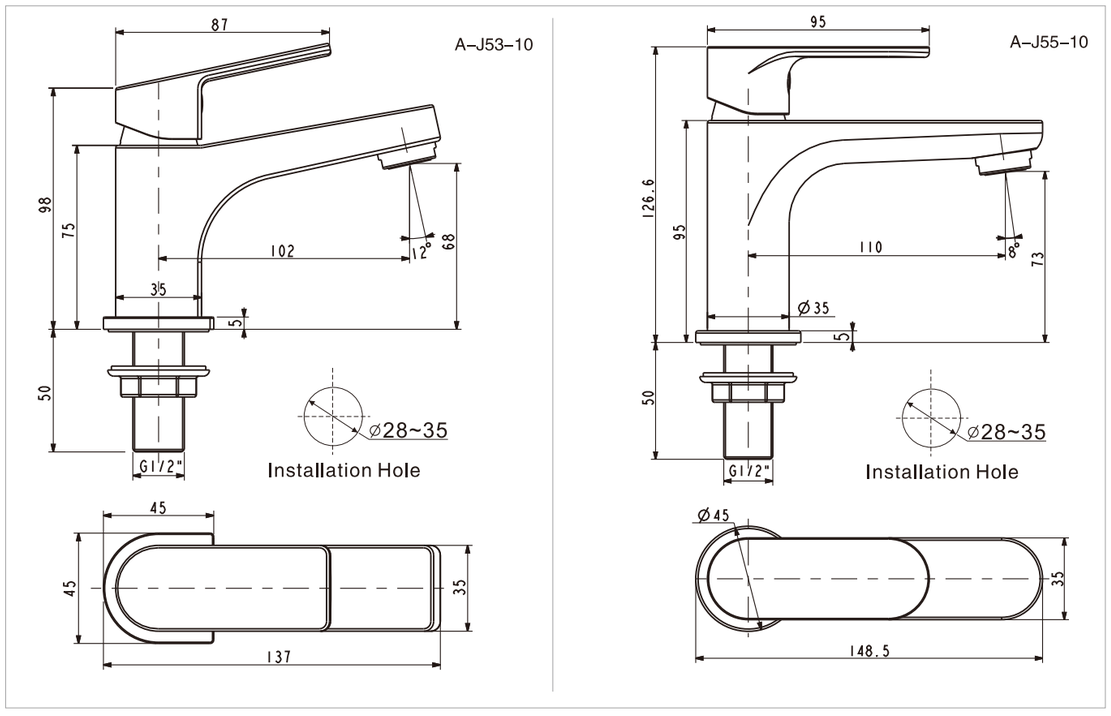

Rev. FF1-CN521K00488999/A0

Dimension

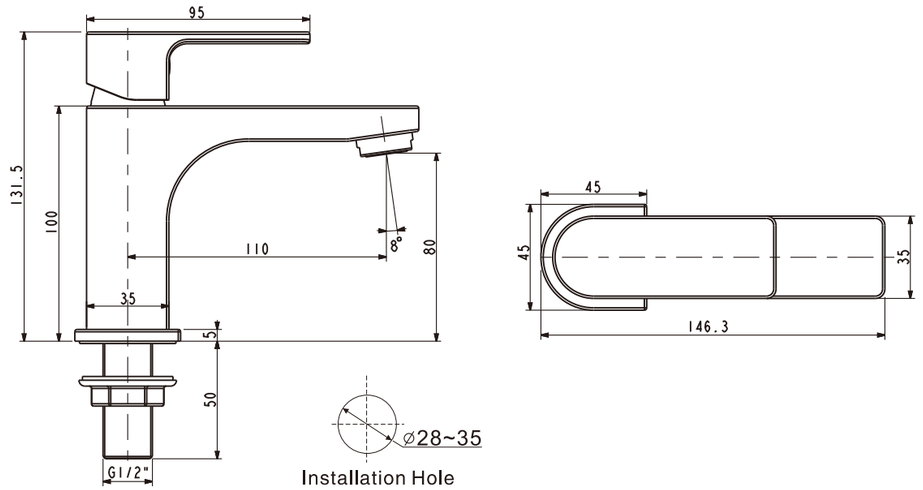

A–J57–10

Parts List

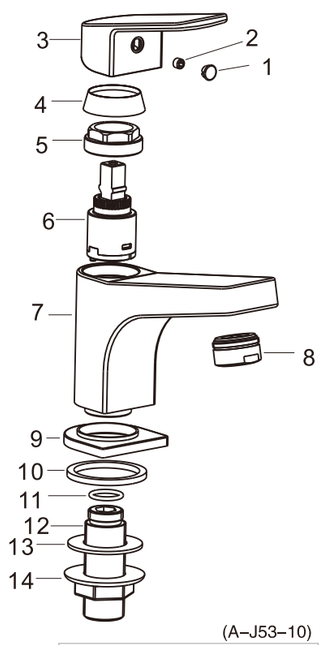

(A–J53–10)

Parts List		
No.	Part Name	Q'ty
1	Index Button	1
2	Screw	1
3	Handle	1
4	Cap	1
5	Nut	1
6	Cartridge	1
7	Body	1
8	Aerator	1
9	Escutcheon	1
10	Washer	1
11	O-Ring	1
12	Shank	1
13	Washer	1
14	Nut	1

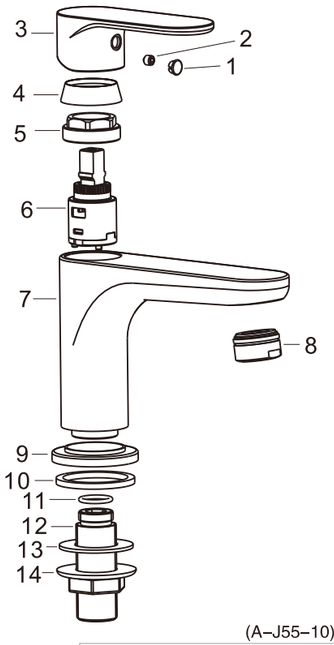

(A–J55–10)

Parts List		
No.	Part Name	Q'ty
1	Index Button	1
2	Screw	1
3	Handle	1
4	Cap	1
5	Nut	1
6	Cartridge	1
7	Body	1
8	Aerator	1
9	Escutcheon	1
10	Washer	1
11	O-Ring	1
12	Shank	1
13	Washer	1
14	Nut	1

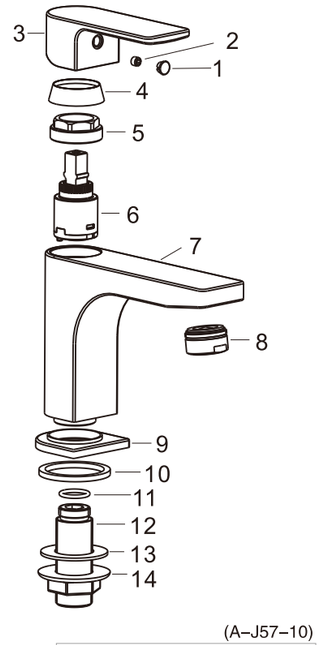

(A–J57–10)

Parts List		
No.	Part Name	Q'ty
1	Index Button	1
2	Screw	1
3	Handle	1
4	Cap	1
5	Nut	1
6	Cartridge	1
7	Body	1
8	Aerator	1
9	Escutcheon	1
10	Washer	1
11	O-Ring	1
12	Shank	1
13	Washer	1
14	Nut	1

Preparation

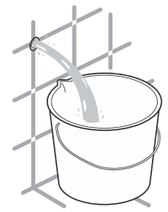

1

* Consult the dimension drawing and lay the pipes.
* Wash and clean the water supply pipeline.

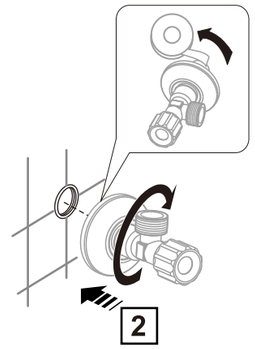

Installation

