Test / Usage

1 Test

* Move handle down into “OFF” position. Turn on water supply valve to check all connections for leak.
* Operate handle up and down, left and right to flush water lines thoroughly.

2 Usage

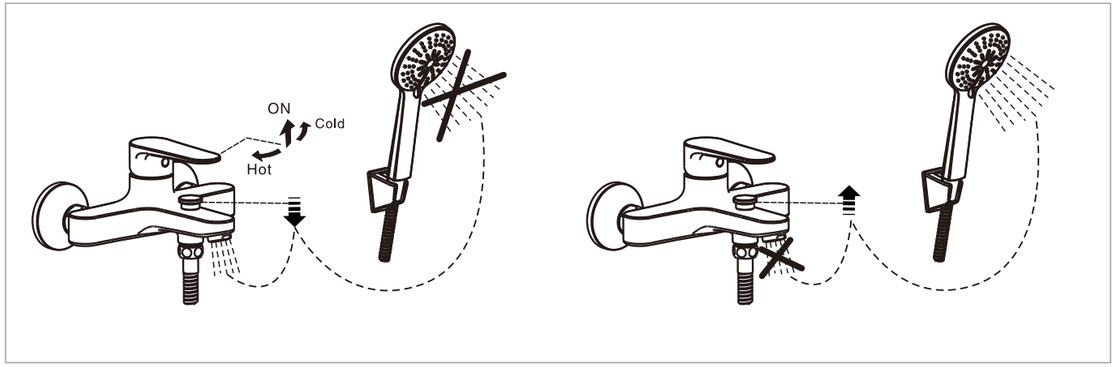

Trouble Shooting Guide

Trouble	Checkpoint	Contents	Action
Poor flow rate	Aerator	Check any impurities.	Remove all impurities.
	Water supply valve	Check valve position.	Open it to full valve
	Flexible hose	Check if hose is twisted.	Untwist the hose.
Leakage	Cartridge packing	Check cartridge install.	When packing is damaged, replace the cartridge.
	Hose junction	Check the connection.	Check the existence of packing and wind it up sufficiently
Deviant Temperature	Supply valve	Check if the water from supply valve is enough or not	Increase water supply
	Supply system	Check if the supply pipe connected correct or not	Connect the hot and cold water pipe correctly

Care & Maintenance

* If you want to do the maintenance for the faucet, please follow the below process.
* Before maintenance, please shut off the water supply system.

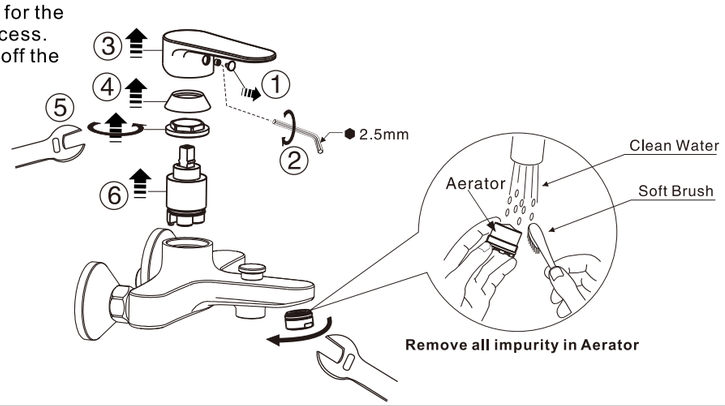



Attention:
Please leave the manual to the customer after installation is finished.

Codie

FFASB211–6T1500BT0
Codie Exposed B&S Mixer W/Shower Kits

FFASB212–7T1500BT0
Codie Exposed Shower Mixer W/Shower Kits

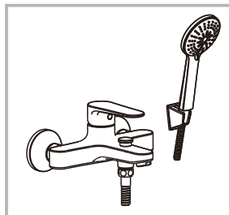
FFASB211–6T1500BT0

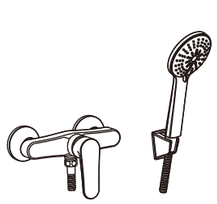
FFASB212–7T1500BT0

American Standard

Installation & Operation Instructions

Thank you for selecting American-Standard - the benchmark of fine quality for over 100 years.
To ensure that your installation proceeds smoothly--please read these instructions carefully before you begin.

* American Standard always keep raising and improving the product design and performance, and reserve the right to modify the dimension and spefication. At this case, we will not inform you separately.
* This installation instruction sheet is for your reference only, the dimension and specification is subject to the actual products.

All instruction procedures must comply in strict accordance with applicable local plumbing and building codes

Pre–Installation Checks

***Remove all impurity in pipes before beginning to avoid clogging. Connect faucet pipes correctly.**
Make sure the cold water hose is connected to the right side and the hot water hose to the left.
*** Check installation distances in the Dimension diagram to ensure correct installation.**

Conditions for use

*** Recommended water pressure condition: 0.1~0.5Mpa.**
*** Environment Temperature:1~55℃**
*** Steam is not allowed to use.**
*** The cold and hot water pipes must not be reserved.**

When in the process of installation, grab the whole body. Do not grab handle only.

Recommended Tools and Materials

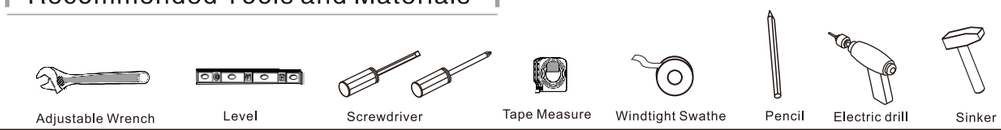

Dimension

Unit：mm

FFASB211–6T1500BT0

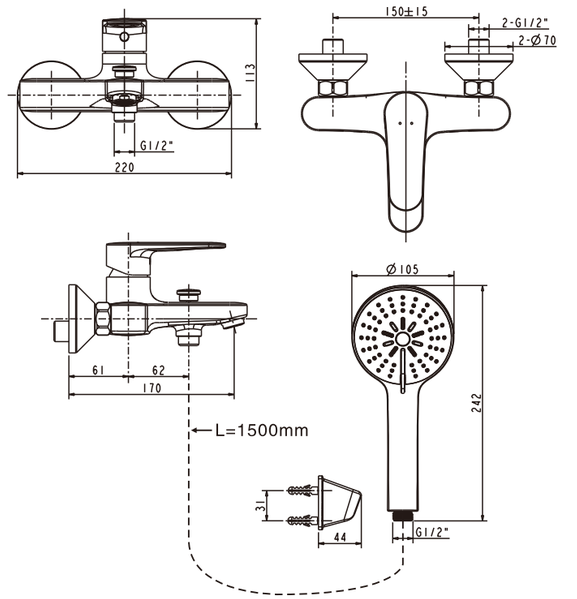

FFASB212–7T1500BT0

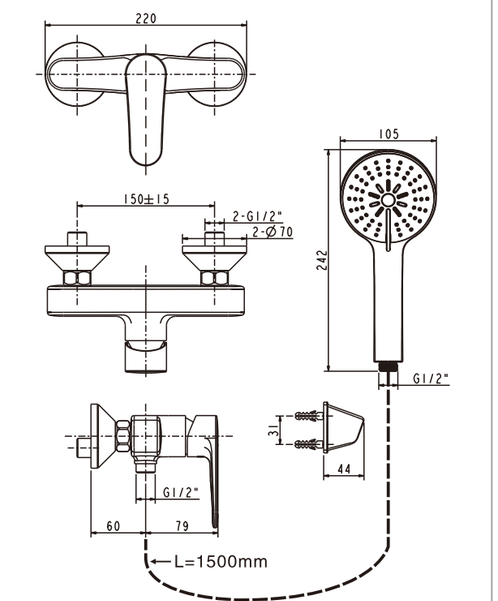

Rev. FF1–CN521K00089399/A2

Parts List

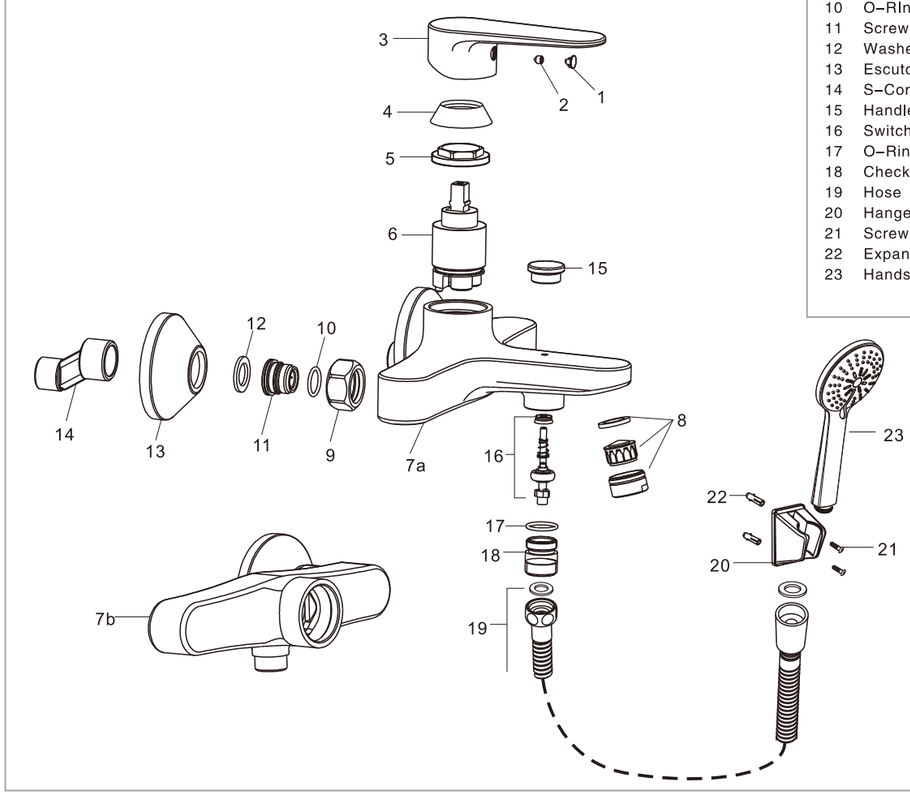

Parts List			
No.	Part Name	Q'ty FFASB211	Q'ty FFASB212
1	Index Button	1	1
2	Screw	1	1
3	Handle	1	1
4	Cap	1	1
5	Nut	1	1
6	Cartridge	1	1
7a	Body	1	0
7b	Body	0	1
8	Aerator	1	0
9	Nut	2	2
10	O–RIng	2	2
11	Screw	2	2
12	Washer	2	2
13	Escutcheon	2	2
14	S–Connector	2	2
15	Handle	1	0
16	Switching Valve	1	0
17	O–Ring	1	1
18	Check Valve	1	1
19	Hose	1	1
20	Hanger	1	1
21	Screw	2	2
22	Expansion Tube	2	2
23	Handshower	1	1

Installation

1 Installing the S-Connector

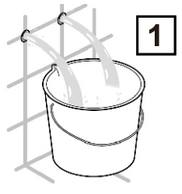

1

* Consult the dimension drawing and lay the pipes.
* Wash and clean the water supply pipeline.

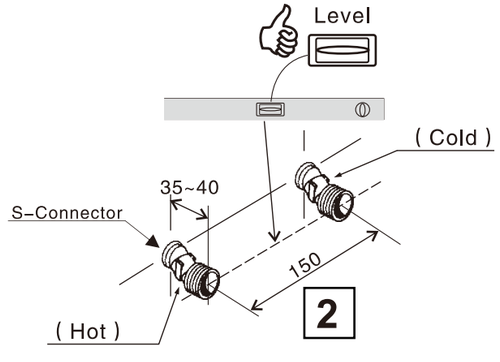

2 Installing the Faucet

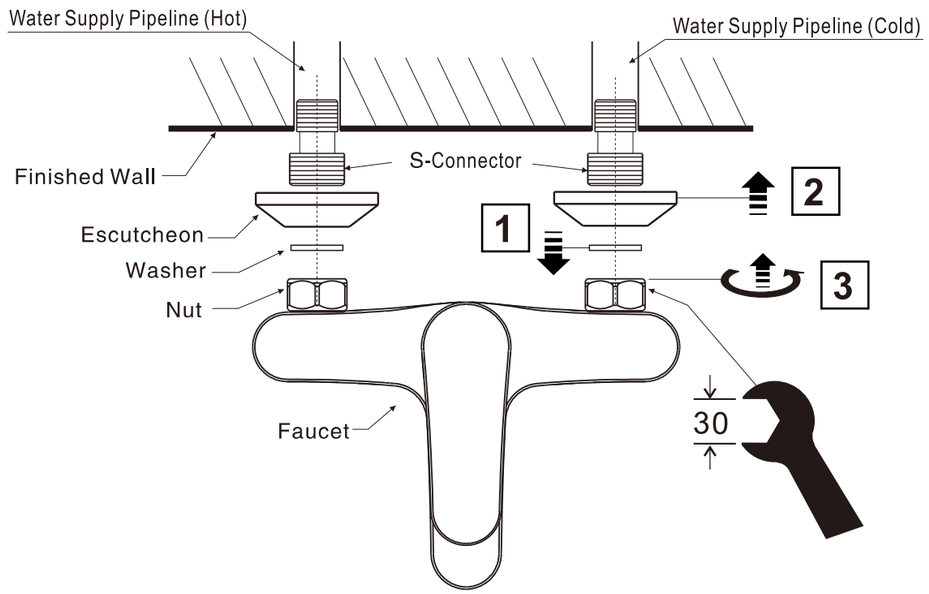

3 Installing the Shower Hanger & Hose

