Tolerance, Unless Otherwise Stated, Is	
Above 0.5 to and including 6	±0.1
Excess 6 to and including 30	±0.2
Excess 30 to and including 120	±0.3
Excess 120 to and including 315	±0.5
Excess 315 to and including 1000	±0.8
Excess 1000 to and including 2000	±1.2

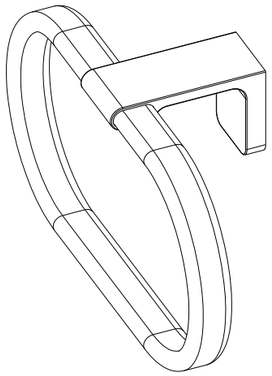

SCALE 0.333

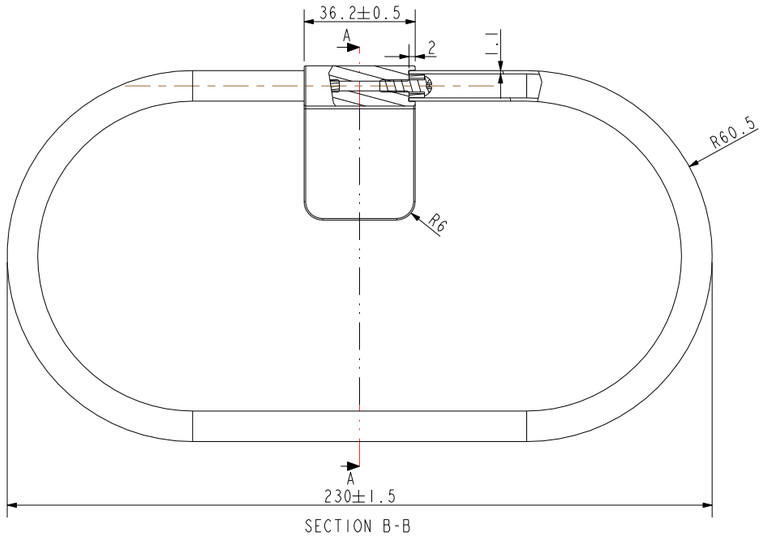

SECTION B-B

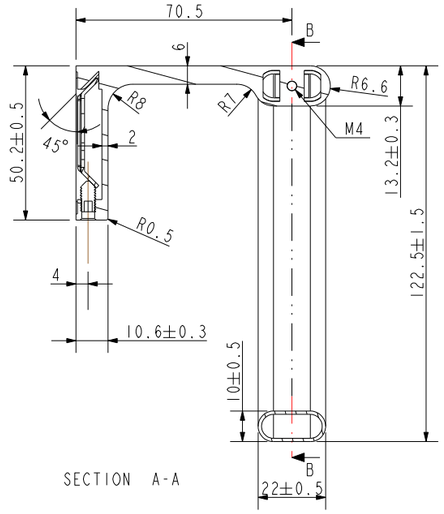

SECTION A-A

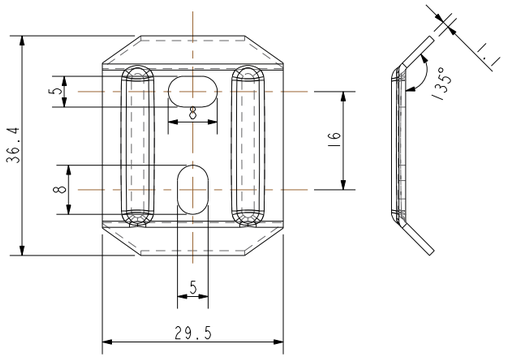

SCALE 1.000

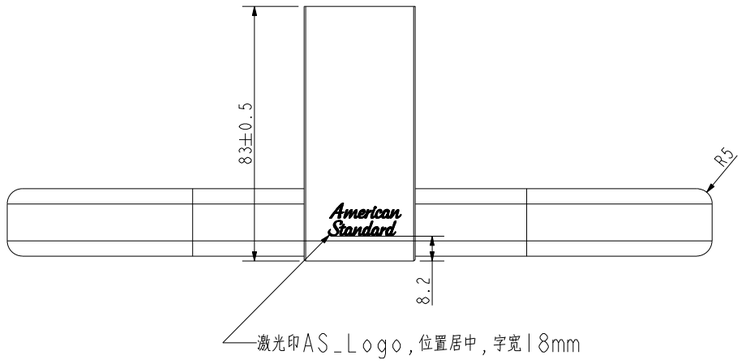

技术要求：

1、所用尺寸均为一般尺寸；

2、具体按《W110.3204》浴室配件进货检验标准检验；

3、产品表面不应有胶水印；

4、产品外箱需标明净重与毛重；

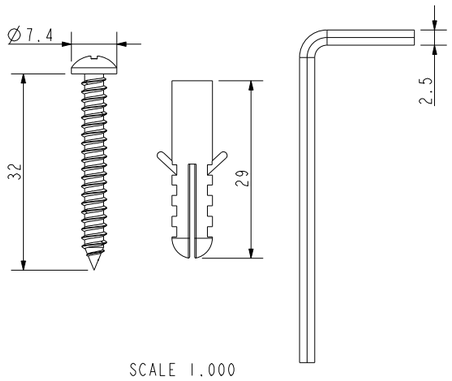

SCALE 1.000

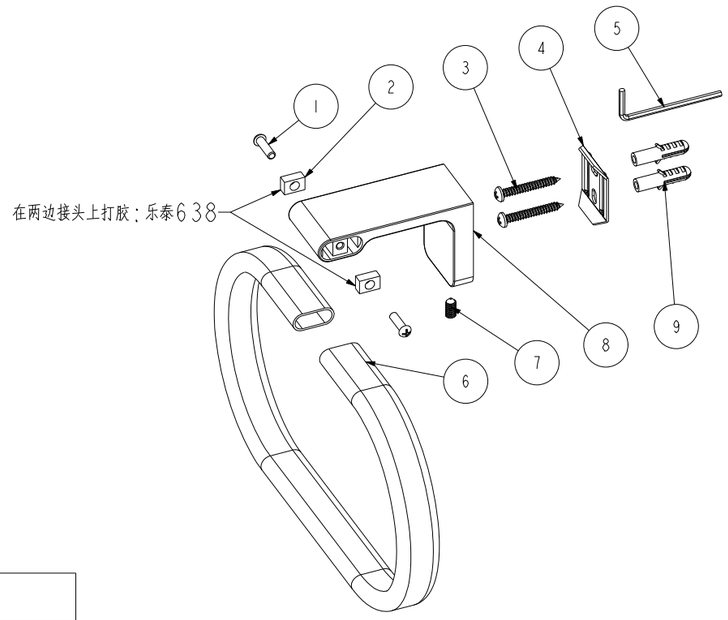

SCALE 0.333

NO.	Part No.	Part Name	QTY	Material	Remark
9	159Z138108	Φ6塑料膨胀管	2	PA66	
8	159Z138101	双衣钩本体	1	ZZnAl4-1	抛光镀铬
7	159Z138104	内六角螺钉 M5*10	1	SUS304	
6	159Z139002	毛巾环 121*229	1	H65	镀铬
5	159Z138109	内六角扳手2.5	1	A3	
4	159Z138106	安装固定片	1	SUS304	
3	159Z138107	ST4.2自攻螺丝	2	SUS304	
2	159Z139001	垫块	2	H62	
1	159Z138105	十字盘头螺钉 M4*22	2	SUS304	

DESIGNED			TITLE	
CHECKED			REF 新阿卡西亚毛巾环	
APPROVED				
SCALE	MATERIAL	WEIGHT	DWG NO.	American Standard
0.500	Assembly		FFAS1390-908500BF0	

REV	DESCRIPTION	DATE	NAME