Tolerance, Unless Otherwise Stated, Is	
Above 0.5 to and including 6	±0.1
Excess 6 to and including 30	±0.2
Excess 30 to and including 120	±0.3
Excess 120 to and including 315	±0.5
Excess 315 to and including 1000	±0.8
Excess 1000 to and including 2000	±1.2

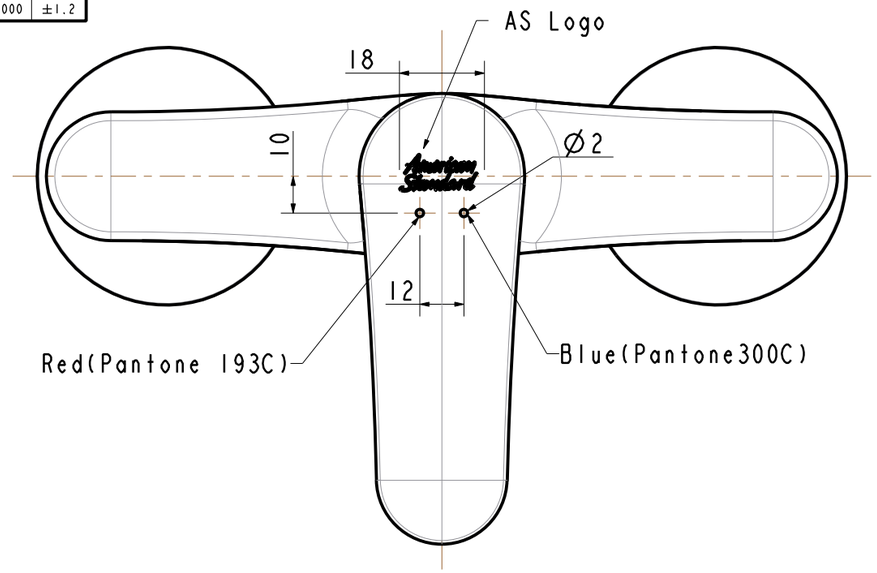

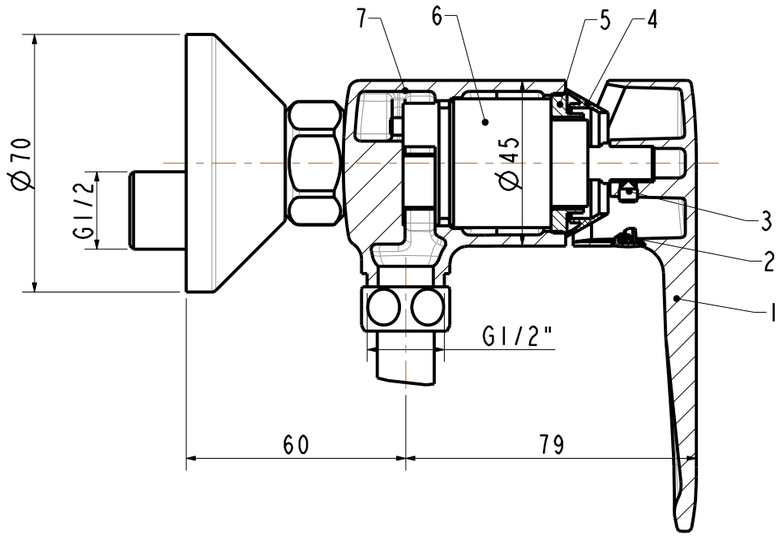

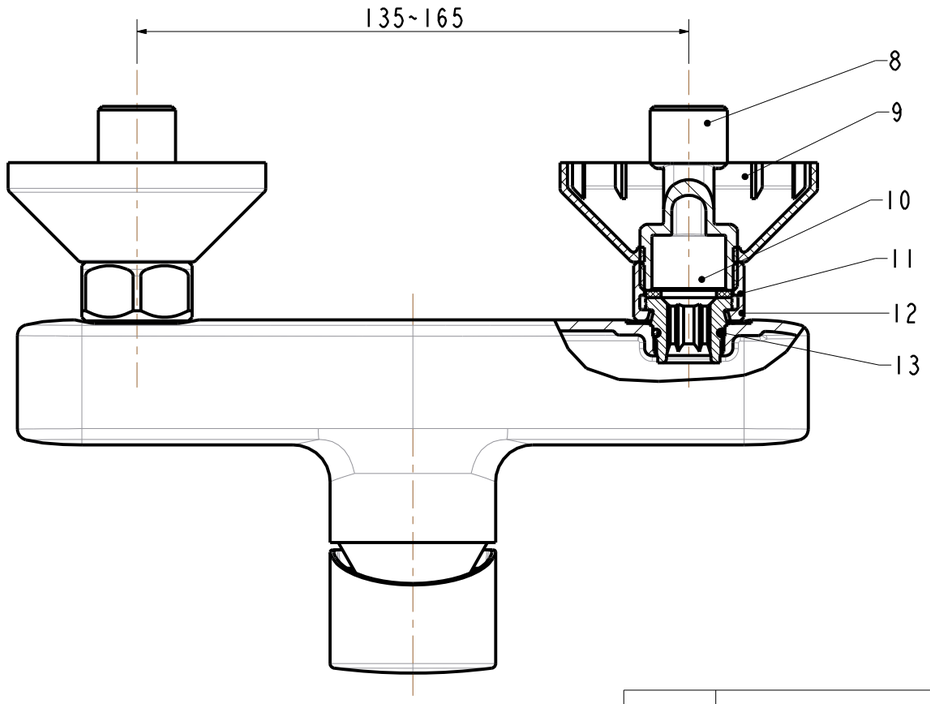

NO.	Part NO.	Part Name	Material	QTY	Remark
13	FF1-CN521G00000112	O-Ring 15.6*1.78	NBR	2	
12	FF1-CN521W00000048	THREADED NIPPLE,N	SUS304	2	
11	FF1-CN521G00000341	Washer Φ24*Φ15*2(A913204)	NBR	2	
10	FF1-CN521N00000291	NUT-G3/4inch,Cr	HPb59-1	2	
9	FF1-CN521F00000094	2000 Escutcheon(Cr)	ABS	2	
8	FF1-CN521J00000242	S-pipe	SUS304	2	
7	FFZZ0021-0000750PL	Body For Simplica Exposed Bath & Shower	GkMs60Fk	1	
6	FF1-CN521C00000041	Cartridge(N35HW)	Assembly	1	
5	FF1-CN521N00000091	Lock Nut for Minimalistic InWall Bathn	HPb59-1	1	
4	FF1-CN521F00000042	Cover For Cartridge	ABS	1	
3	FF1-CN521N00000228	Screw	SUS304	1	
2	FF1-CN521Z00000086	Index Button for TONIC Fitting line	ABS	1	
1	FF1-CN521L00000197	Handle For A51 Single Hole Lava Faucet	ZZnA14-1	1	

DESINGED			TITLE
CHECKED			REF Simplica Exposed Shower Mixer
APPROVED			

REV	DESCRIPTION	DATE	NAME

SCALE	MATERIAL	WEIGHT	DWG NO.
3:5	Assembly		

American Standard