Tolerance, Unless Otherwise Stated, Is	
Above 0.5 to and including 6	±0.1
Excess 6 to and including 30	±0.2
Excess 30 to and including 120	±0.3
Excess 120 to and including 315	±0.5
Excess 315 to and including 1000	±0.8
Excess 1000 to and including 2000	±1.2

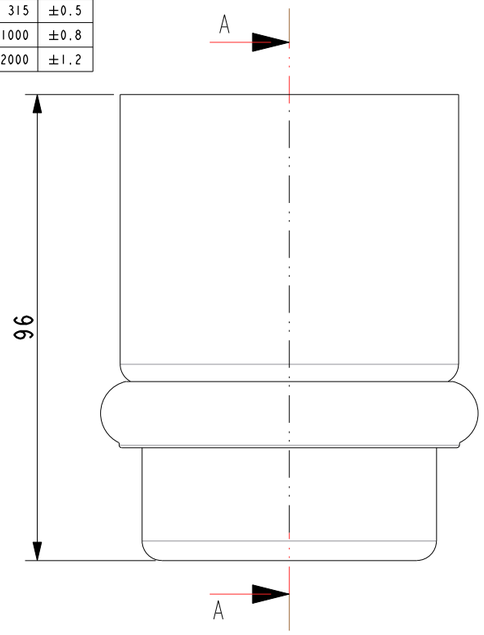

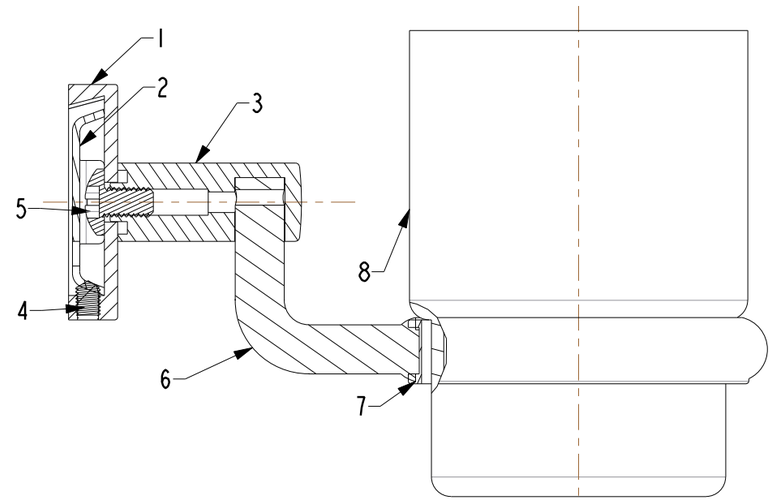

SECTION A-A

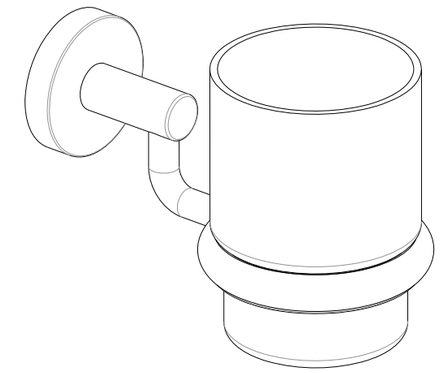

SCALE 0.500

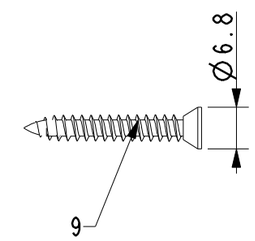

SCALE 1.000

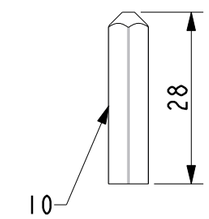

SCALE 1.000

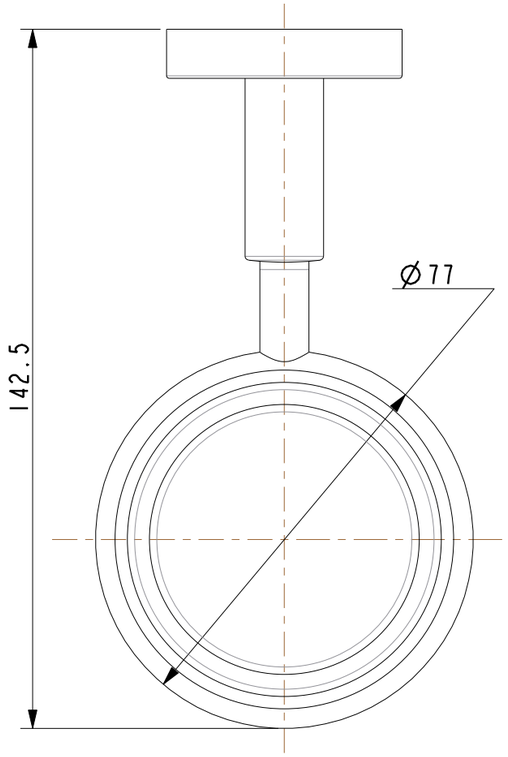

激光印 AS_Logo,字宽 18，
具体见《WI09.2127》-概念浴室配件印字作业要求

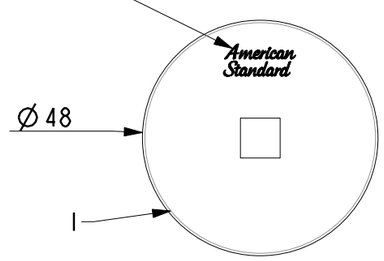

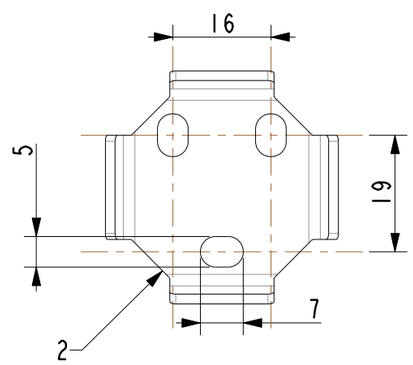

SCALE 1.000

技术要求:

1、按《WI10.3204》浴室配件进货检验标准检验;

2、所有尺寸为一般尺寸。

序号	料号	名称与描述	材料	数量	备注
10	159Z148107	胀套	PA66	3	
9	159Z148106	自攻螺钉ST4*28	SUS201	3	
8	159Z148403	杯子	Glass	1	磨砂
7	159Z148402	衬套	PC	1	
6	159Z148401	托架	ZZnAl4-1	1	抛光镀铬
5	159Z148105	本体螺钉M6*10	SUS201	1	
4	159Z148104	支座螺钉M5*8	SUS201	1	
3	159Z148401	概念圆本体	ZZnAl4-1	1	抛光镀铬
2	159Z148102	概念圆固定垫片	SUS201	1	
1	159Z148101	概念圆支座	ZZnAl4-1	1	抛光镀铬

REV	DESCRIPTION	DATE	NAME

DESIGNED			TITLE
CHECKED			REF 概念圆单杯架
APPROVED			
SCALE	MATERIAL	WEIGHT	DWG NO.
0.800	Assembly		FFAS1484-908500BF0

American Standard