Trouble Shooting Guide

Problem	Reason	Correction
No Detection No Flow	* Check Battery installation. * Check wire connection. * When installed, the faucet and the sink is not insulated. * Battery box is installed, the battery box is not connected to the ground.	* Installing the Battery correctly. * Connecting the wire correctly. * Installing the Faucet correctly. * Installing the Battery Box correctly.
Has detection but no flow	* Water supply is normal or stop valve is closed.	* Open the water supply.
Low water flow	* The stop valve is not opened entirely. * The filters are blocked. * Low water pressure.	* Open the stop valve entirely. * Clean the filters. * Contact with water supply department.
Water flow nonstop	* Connect the power cable fails.	* Checking the Power Cable.

If the problem can not be solved, please find the nearest vendor or call the customer service hotline.



Attention:
Please leave manual with customer post installation.

FFAS5644–5T1500BT0
Touch Sensor Multi–function Kitchen Faucet (DC)

FFAS5644–501500BF0
Touch Sensor Multi–function Kitchen Faucet (DC)

FFAS5644–5015L0BF0
Touch Sensor Multi–function Kitchen Faucet (DC)

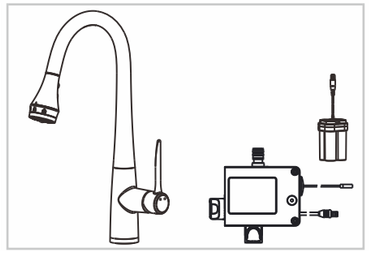

American Standard

Installation & Operation Instructions

Thank you for selecting American-Standard - the benchmark of fine quality for over 100 years.
To ensure that your installation proceeds smoothly--please read these instructions carefully before you begin.

* American Standard continually improves our product design and performance and reserves the right to modify the dimension and specification of our products accordingly without any prior notification.
* This installation instruction sheet is for your reference only, the dimension and specification is subject to the actual products.

Environment Requirement and Preparation

All instruction procedures must comply in strict accordance with applicable local plumbing and building codes

1. Installation should be done by professionals.
2. Remove all impurity in pipes in order to prevent from clogging before installing the faucet;
3. Check if the pipeline layout can meet the requirement according to the dimension drawing shown in installation sheet ;
4. Drinking water should be supplied for the faucet, sea water is forbidden;
5. The faucet should be installed as far as possible away from fluorescent lamps, energy–saving lamps and other lamps and microwave ovens, electric stove, electric appliances and etc. If the space is limited, at least one meter away is required. Otherwise, there is impact on the faucet's correct operation;

Conditions for use

*** Water pressure condition: 0.1~0.75MPa (Recommended water pressure condition: 0.2~0.5Mpa)**
*** Environment Temperature:1~55℃**
*** Water temperature: 4 ~ 90 ℃. The recommended max temperature for hot water is 60℃**
*** Steam is prohibited to be used.**
*** The cold and hot water pipes can't be reserved.**

Recommended Tools and Materials



Adjustable Wrench | Screwdriver | Tape Measure | PTFE tape | Pencil | Electric Drill | Sinker

Specification

Type	FFAS5644–5T1500BT0 / FFAS5644–501500BF0 / FFAS5644–5015L0BF0
Battery	6V (4Pcs 1.5V AA Basic Battery)
Operation Mode	Touch Control (Normal condition); Manual Only (Only for special case, such as Battery running out)
Touch Area	Spout and Body
Water saving Function	As soon as water flows more than three minutes, water flow will shut off automatically.

Dimension Drawing

Unit：mm

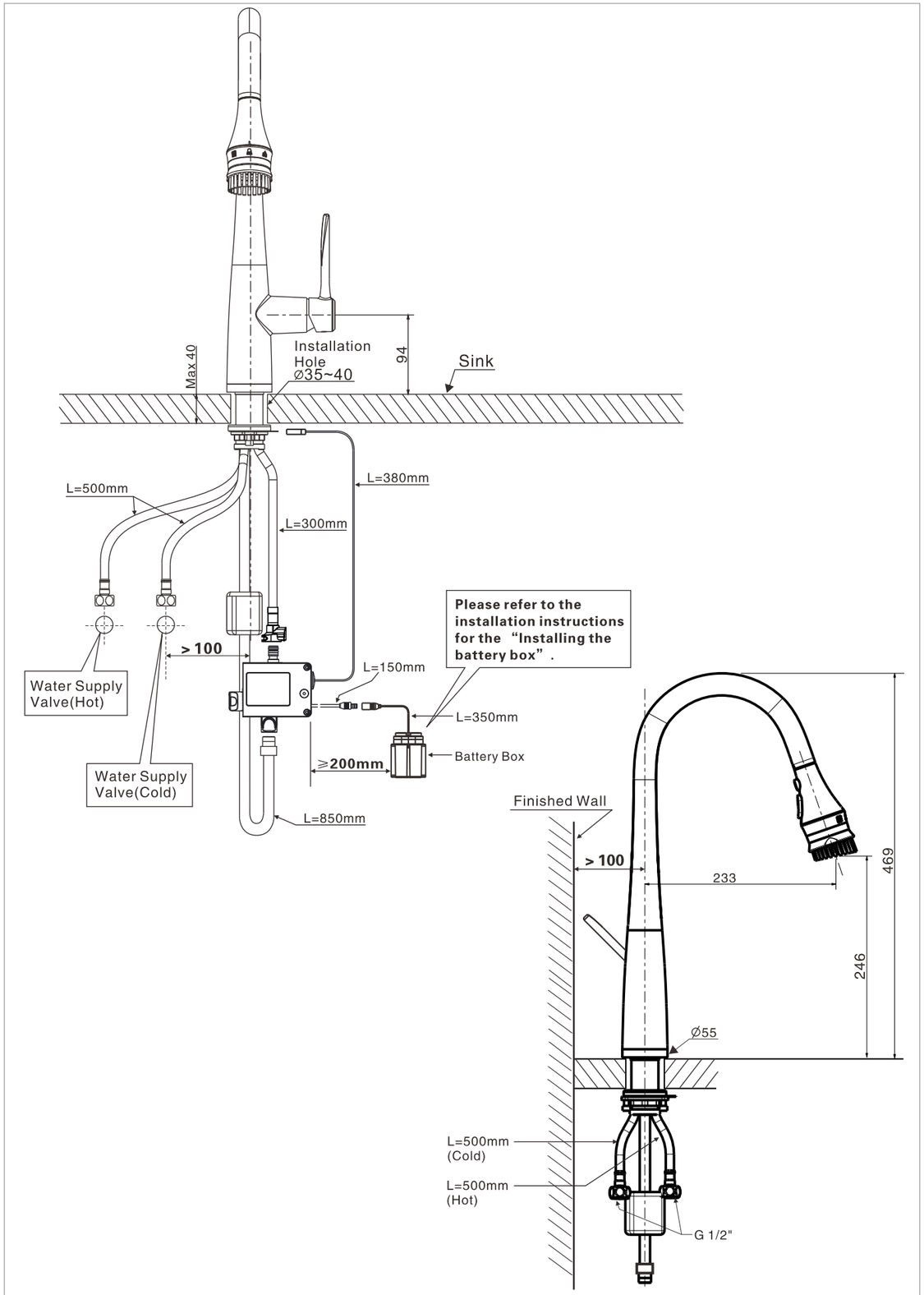

Care & Maintenance

* Dirt may accumulate in Aerator to cause water flow distorted or water flow smaller. Remove and clean Aerator and then re–install it.
* Dirt may accumulate in inlets to cause water flow smaller. Please clean inlets.
* When you want to do cleaning or maintenance for the faucet, please follow the below process.

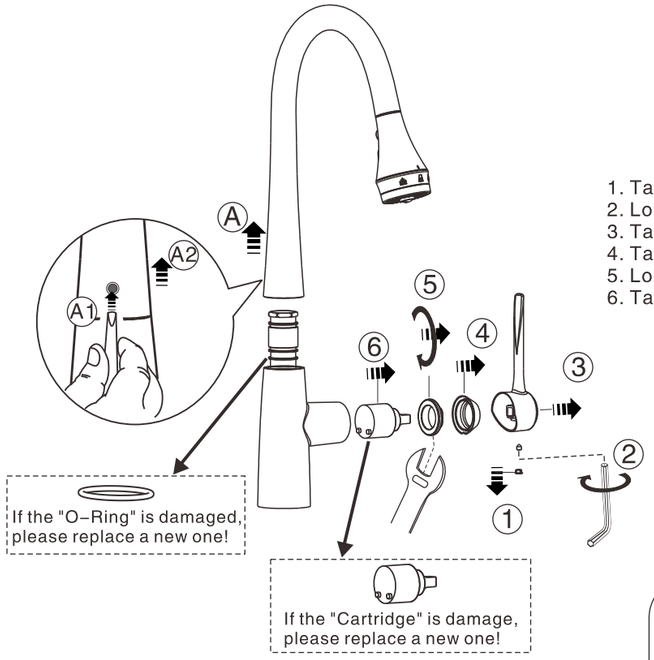

1. Take out Index Button.
2. Loosen Screw with wrench.
3. Take out Handle
4. Take out Cap.
5. Loosen Nut with Wrench.
6. Take out Cartridge.

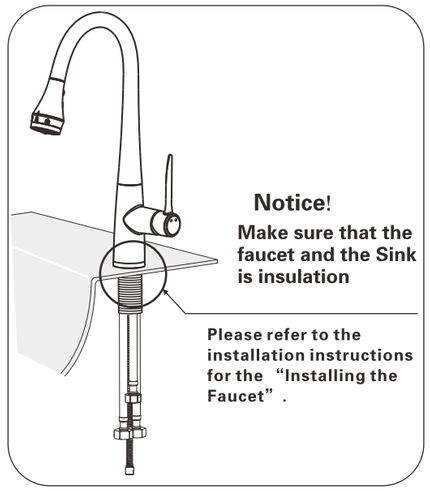

Notice!

Make sure that the faucet and the Sink is insulation

Please refer to the installation instructions for the “Installing the Faucet”.

Filter Cleaning:

1.Take out the Filter.
2. Clean the Filters with clean water.
3. Reinstall the Filter and test the water flow.

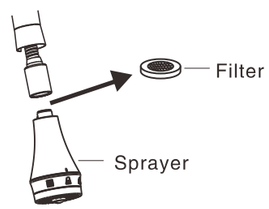

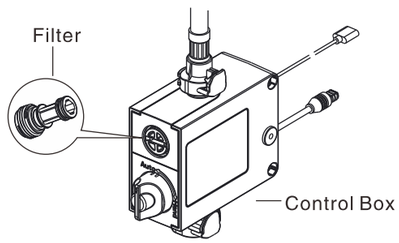

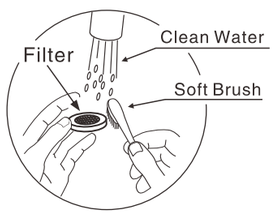

5 Faucet Operation

A Faucet Operation under Touch Mode

Notice: the Spray and the handle are not the sensing region

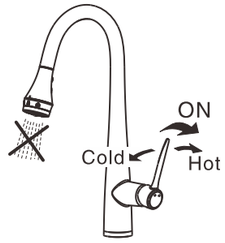

A1. Make sure "Touch" mode is chosen on the Switch Valve, and the Handle of the Faucet is under open condition.

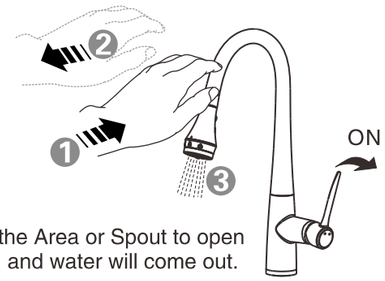

A2. Touch the Area or Spout to open the Faucet, and water will come out.

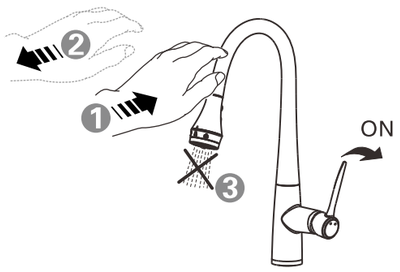

A3. Touch the Area or Spout to shut off the Faucet when water is flowing; water flow will stop.

B Faucet Operation Under Manual Mode

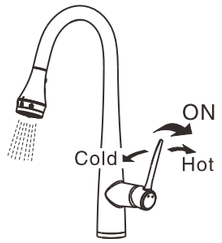

Only for special case, such as Battery running out.

C Spray Operation



(Bubble)

Bubble as default, then press the switching button to divert to the other sprays.



(Conventional Spray)



(Blade Spray)



(Mist Spray)

Rotating spray to choose different function of water outlet.

- ❋ Conventional Spray: for cleaning vegetables etc.
- ❋ Blade Spray: for cleaning sink, plate etc.
- ❋ Mist Spray: for cleaning fruits etc.
- ❋ Pause Button: temporarily stop the water.

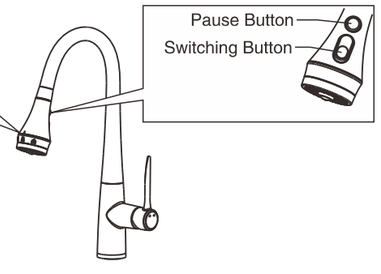

Pull–out Spray

1. Note: Be gently and not overexert when you pull the Spary out to avoid any damage for the faucet.
2. The Max. stretching distance for the pull–out spout is 300mm.

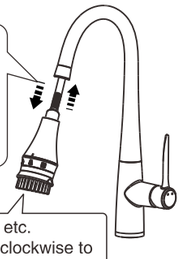

* The brush is used to clean sink, kitchenware etc.
* If need to reinstall the brush, please turn anticlockwise to push into the spray, when hearing "click" sound, it is OK. If not need to use the brush, please turn clockwise to loose and then take off.

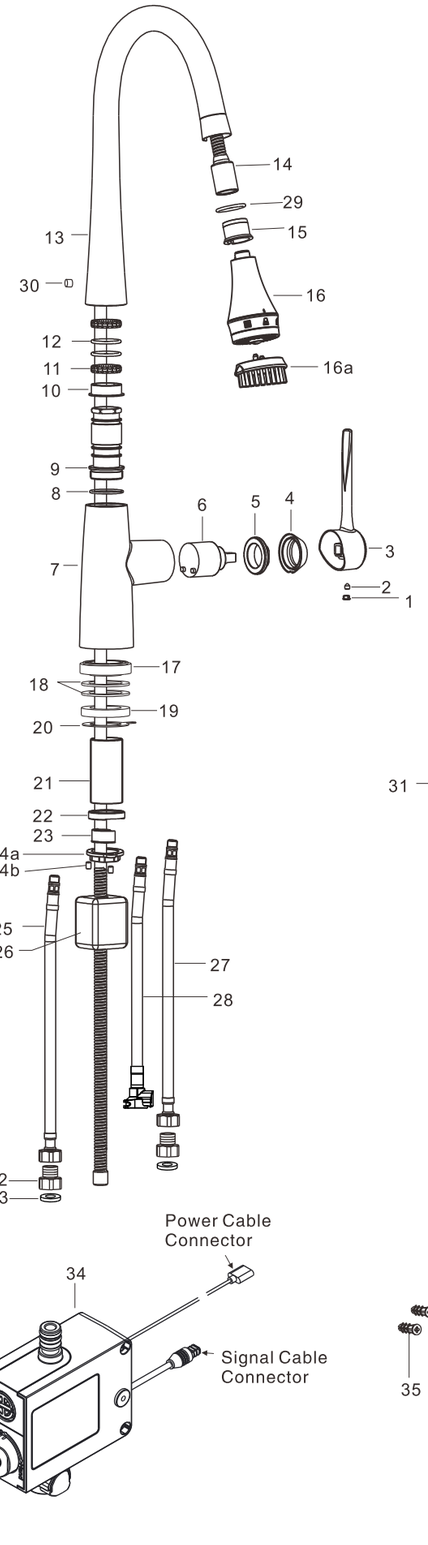

Parts List

No.	Part Name	Q'ty
1	Index Button	1
2	Screw	1
3	Handle	1
4	Cap	1
5	Nut	1
6	Cartridge	1
7	Body	1
8	O–Ring	1
9	Connector	1
10	Bushing	1
11	Washer	2
12	O–Ring	2
13	Elbow Pipe	1
14	Pull–Out Hose(1500mm)	1
15	Bushing	1
16	Spray	1
16a	Brush	1
17	Plastic Base(black)	1
18	Rubber Gasket	2
19	White Plastic Washer	1
20	Conductive Copper Gasket	1
21	Screw Bolt	1
22	Nut	1
23	Pipe Clamp	1
24a	Nut	1
24b	Screw	2
25	Hose (Red)	1
26	Weight	1
27	Hose (Blue)	1
28	Hose	1
29	O–Riong	1
30	Screw	1
31	In–hex Wrench	1
32	Adapter	2
33	Washer	2
34	Control Box	1
35	Anchor	2
36	Screw	2
37	Fixed Plate	1
38	Battery Box	1
39	Battery Anchor	1
40	Battery	4

Installation

1 Preparation

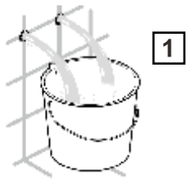

1a. Lay waterpipe according the dimension drawing.
1b. Install the sink.
1c. Clean the water supply pipeline before installation.

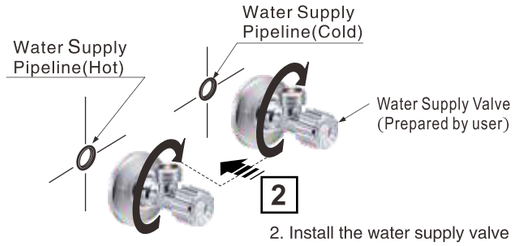

2. Install the water supply valve

2 Faucet Installation

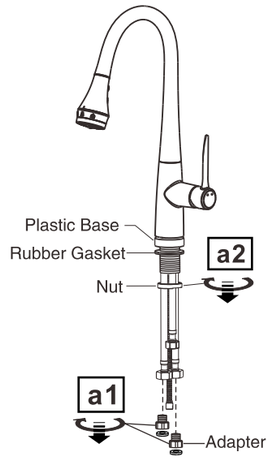

a1. Removing the two adapters.
a2. Removing the nut.
b. Putting the faucet into installation hole.
c. Installing three washers one by one.
d. Installing the nut.
e. Locking the two Screws.
f. Installing pipe clamp.
g. Installing the nut.

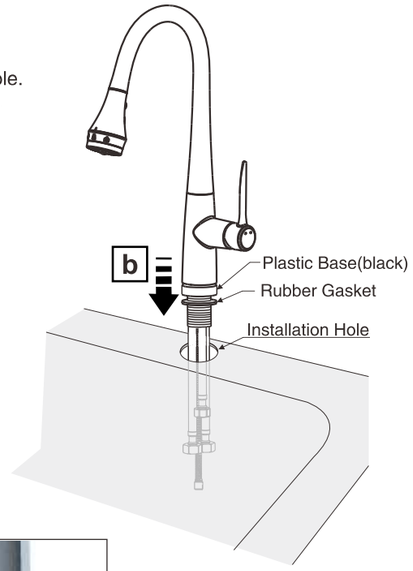

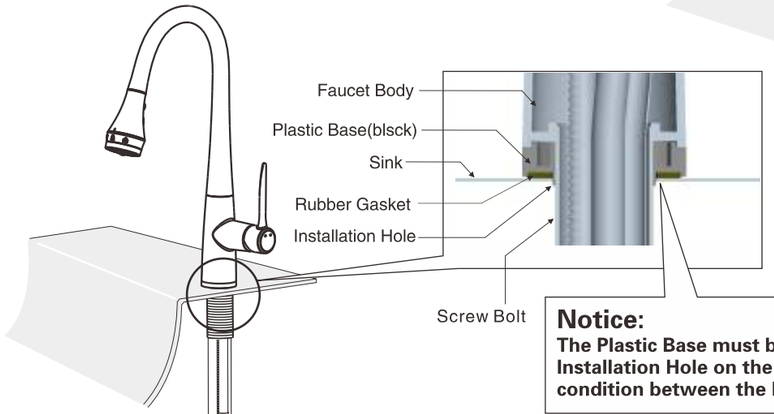

Notice:
The Plastic Base must be installed through the Installation Hole on the Sink to ensure the insulation condition between the Faucet and the Sink.

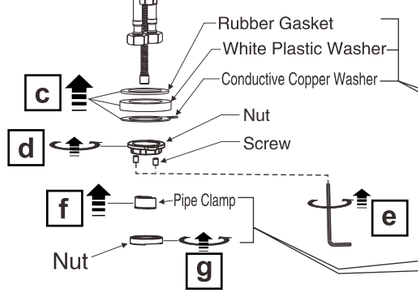

The washers must be installed one by one in sequence, otherwise, the Faucet can't work properly

**It must be fixed with pipe clamp and nut.
If not it will be hand to pull–out spray.**

Operation Manual

1 Test

1. Make sure the power supply and water supply has been well connected.
2. Open the water supply, confirm the connection without leakage.
3. Refer to use instructions for operation, check the function is normal .

2 Precautions before usage

1. This product uses capacitive sensing technology, gloves or insulating objects will not be the product of normal operation.
2. When the high frequency of use faucet, please handle remains open.
3. This product is a capacitive touch sensing control, the water sprayer and the handle position is not the sensing area.
4. Touch the body by hand to open the water. Touch the body again to close the water. If you wear gloves on hand, pleaes swtich to manual mode to open and close the water by handle.
5. If the surroundings around changes suddenly, the product will be in self regulation status for 5~10 seconds, the product can not work during this period,please wait and don't touch the product. The product will return to normal after 5~10 senconds
6. The product has self shut–off function, the product will be close when the water continuously flows for 3 mintues. You can touch the product again to open the water.
7. If the product will not be used for a long time, please put handle back to close position.

3 Usage switching valve

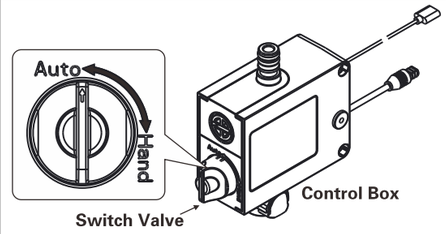

Touch Mode or Manual Mode can be selected by changing the direction of the Handle Lever on the Switch Valve

1. Touch Mode
When the Handle Lever is put at the vertical direction, the Faucet works in the "Touch" Mode; you can touch the Faucet to open or open or shut off water flow;

2. Manual Mode
When the Handle Lever is put at the horizontal direction, the Faucet works in the "Manual" Mode; you operate the Handle on the Faucet to open or shut off water flow;

4 Sensitive Region Instructions

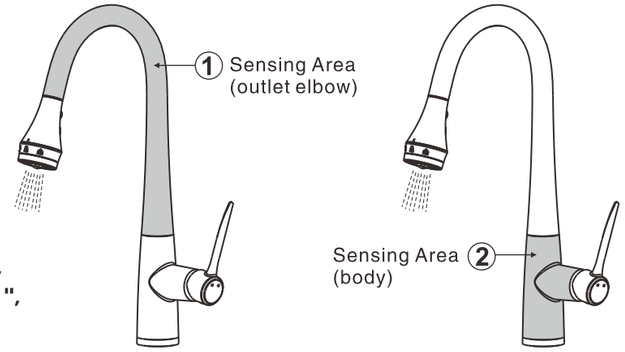

Sensing Area Instructions:
When the product is in "Touch" mode, Touch the sensing Area " 1 " or " 2 ", the water will flow out.

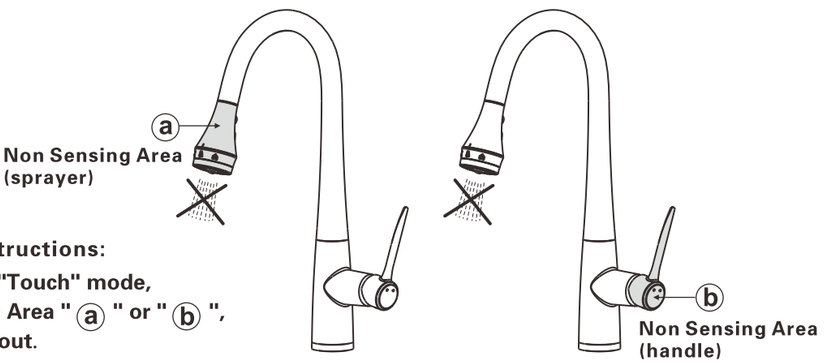

Non Sensing Area Instructions:
When the product is in "Touch" mode, Touch the Non–sensing Area " a " or " b ", the water will not flow out.

Installation

6 Wire Connect

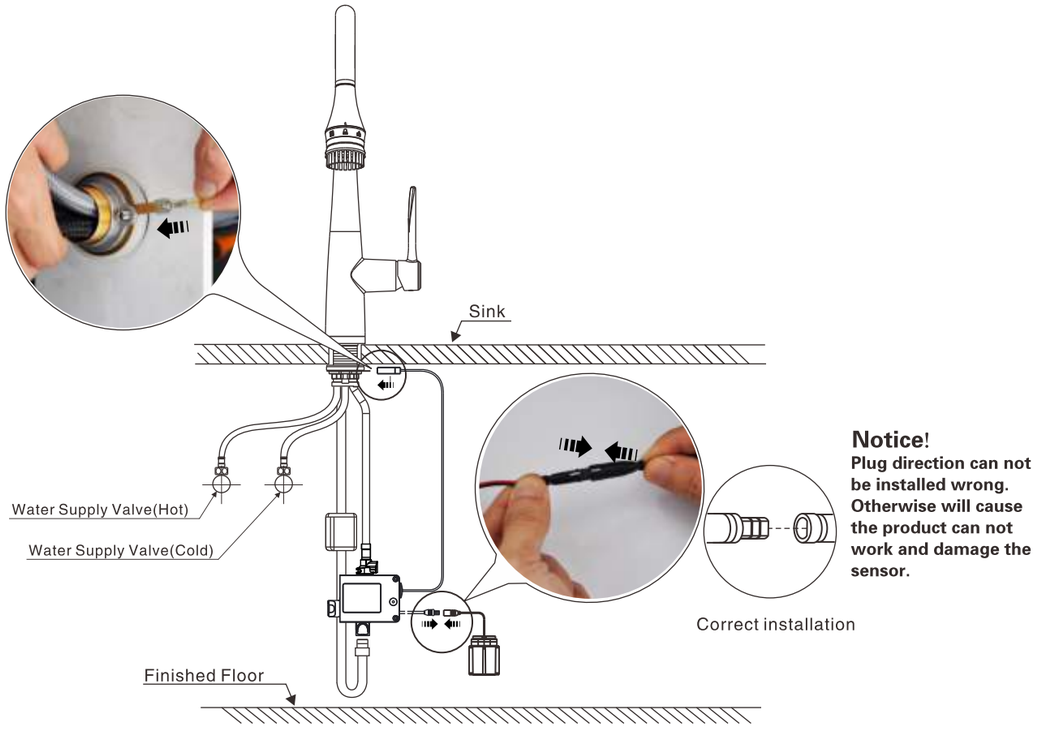

Notice!
Plug direction can not be installed wrong. Otherwise will cause the product can not work and damage the sensor.

7 Battery Installation

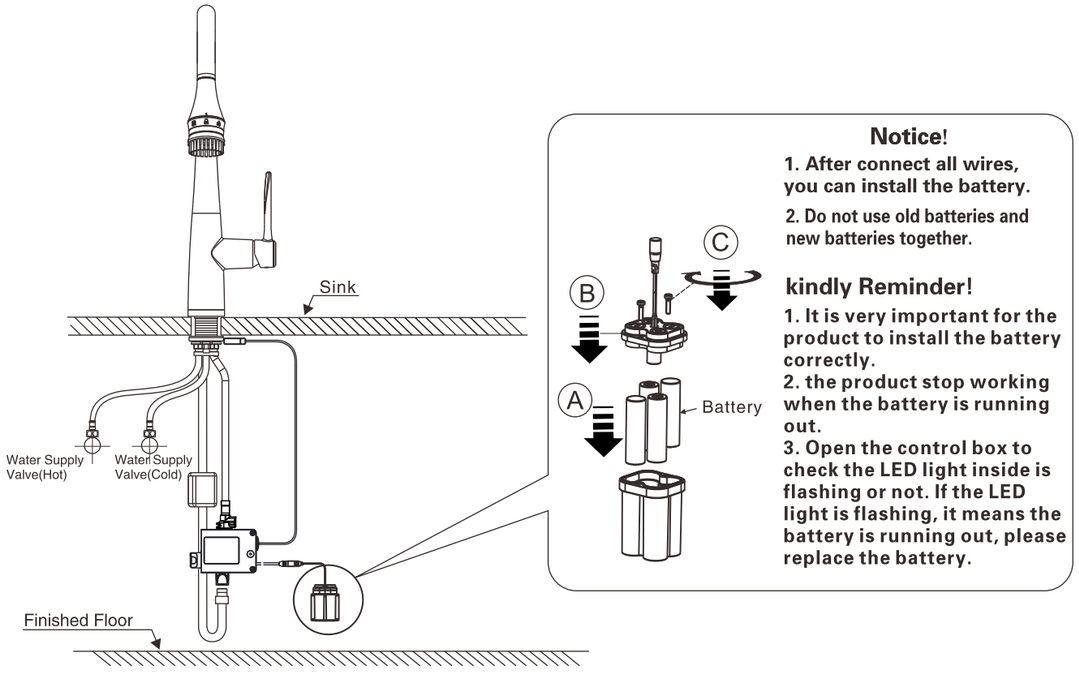

Notice!
1. After connect all wires, you can install the battery.
2. Do not use old batteries and new batteries together.

kindly Reminder!
1. It is very important for the product to install the battery correctly.
2. the product stop working when the battery is running out.
3. Open the control box to check the LED light inside is flashing or not. If the LED light is flashing, it means the battery is running out, please replace the battery.

Installation

3 Control Box and Weight Installation & Pipeline Connecting

a. Install inlet hose.
b. Install outlet hose.
c. Install the weight.
d. Install the adapter to the water supply valve.
e. Connected the hose

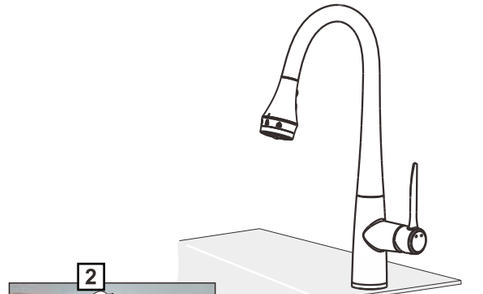

1. The hose into the weight of the card.
2. Close the weight.



3. Locking the screw

Notice!
Prevent hose from winding.

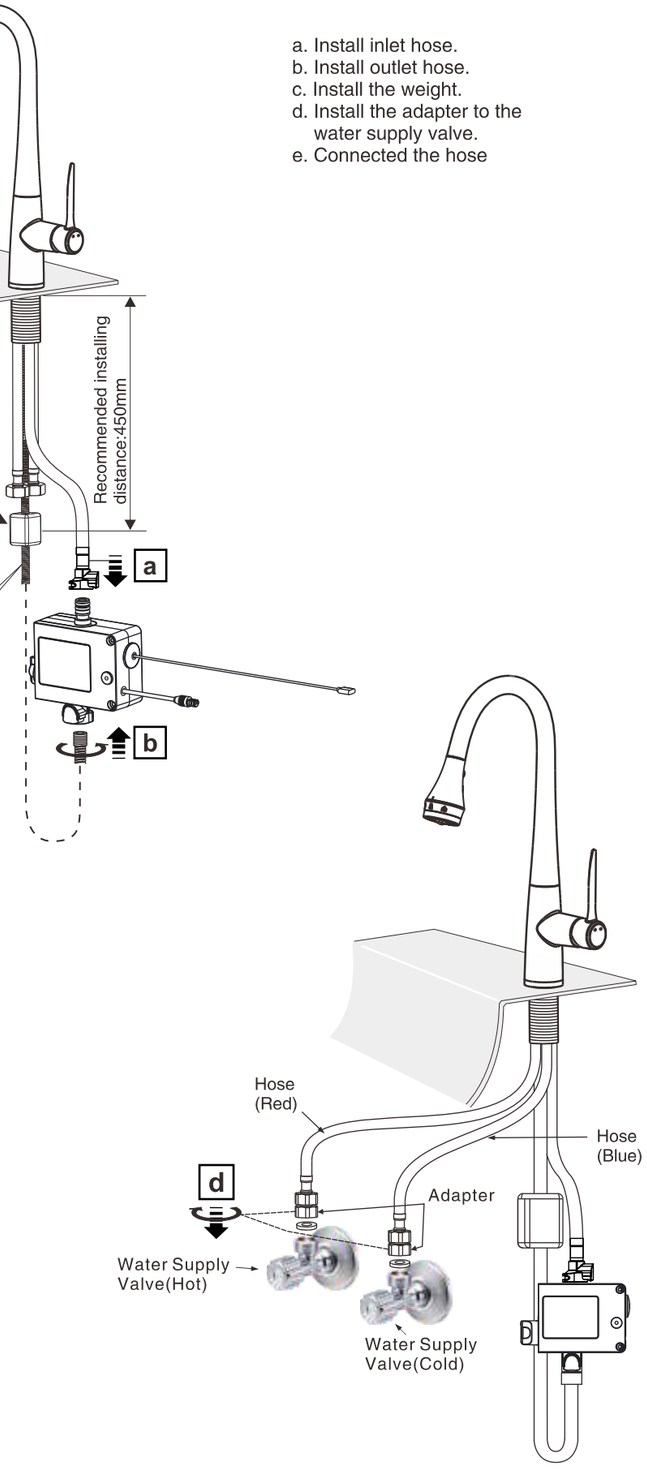

4 Battery Box (The Option of the installation position)

There are two options to install Battery Box. One is to install the Battery Box on the wall; the other one is to install the Battery Box on the floor. You can choose one of them to install the Battery Box based on your condition.

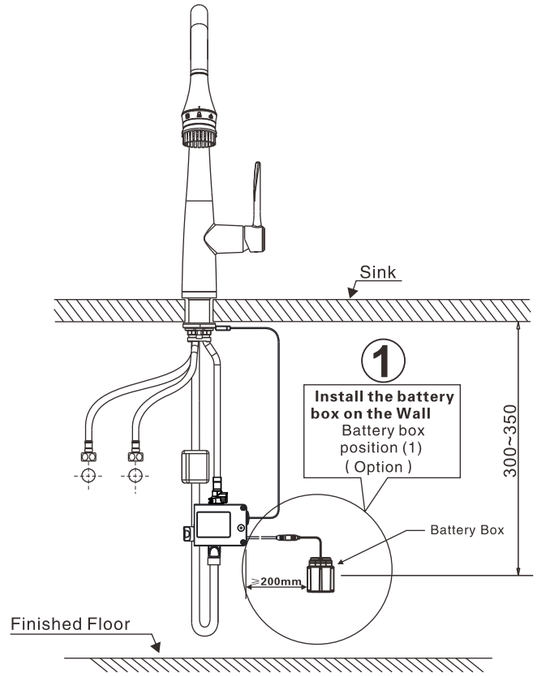

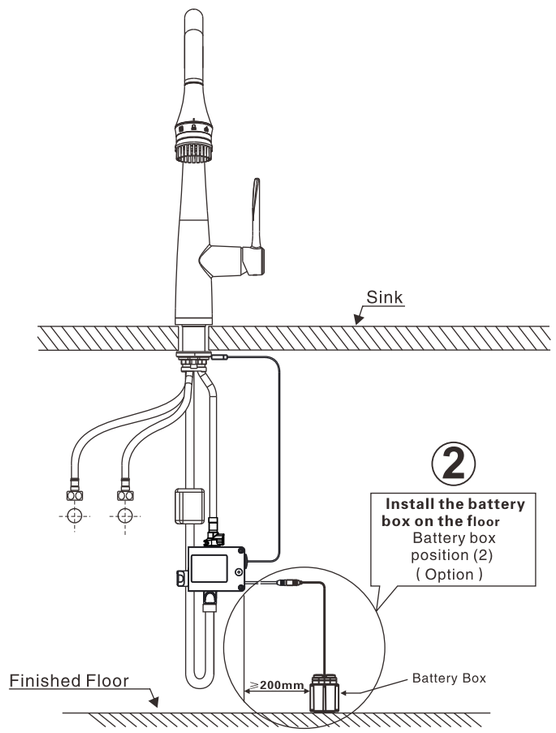

5 Battery Box Installation

(1) Installing the Battery Box on the wall

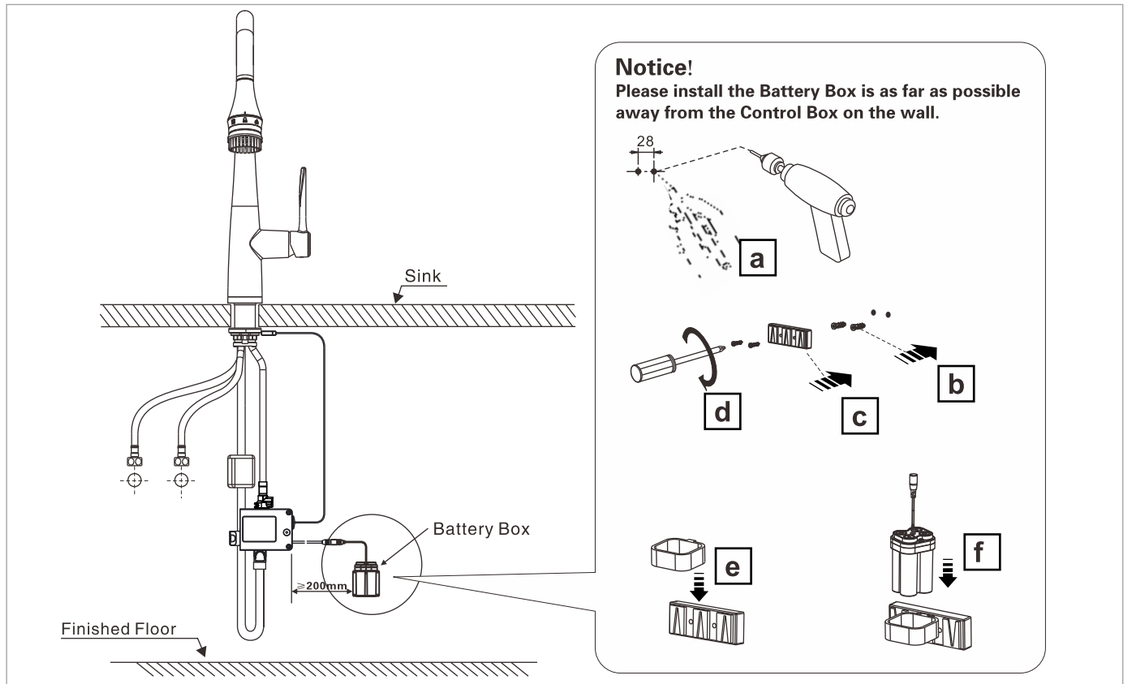

(2) Installing the Battery Box on the Floor

