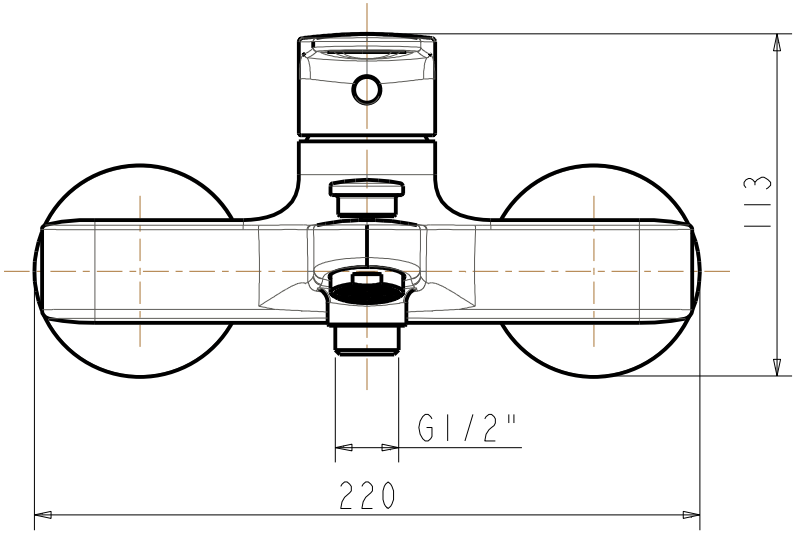
113
G1/2"
220

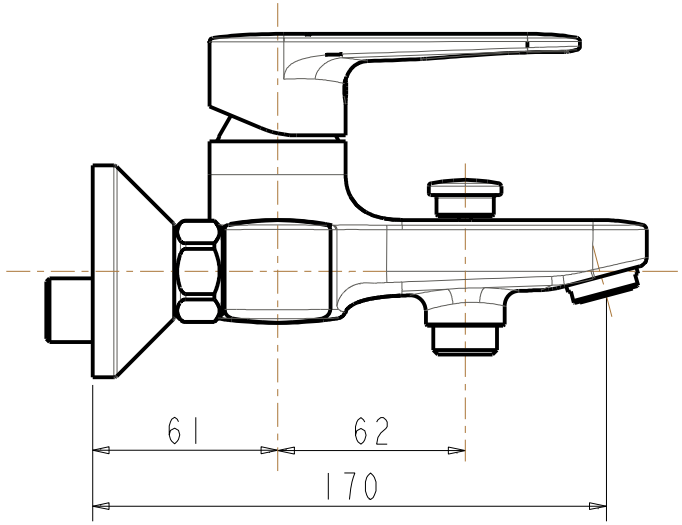
61
62
170

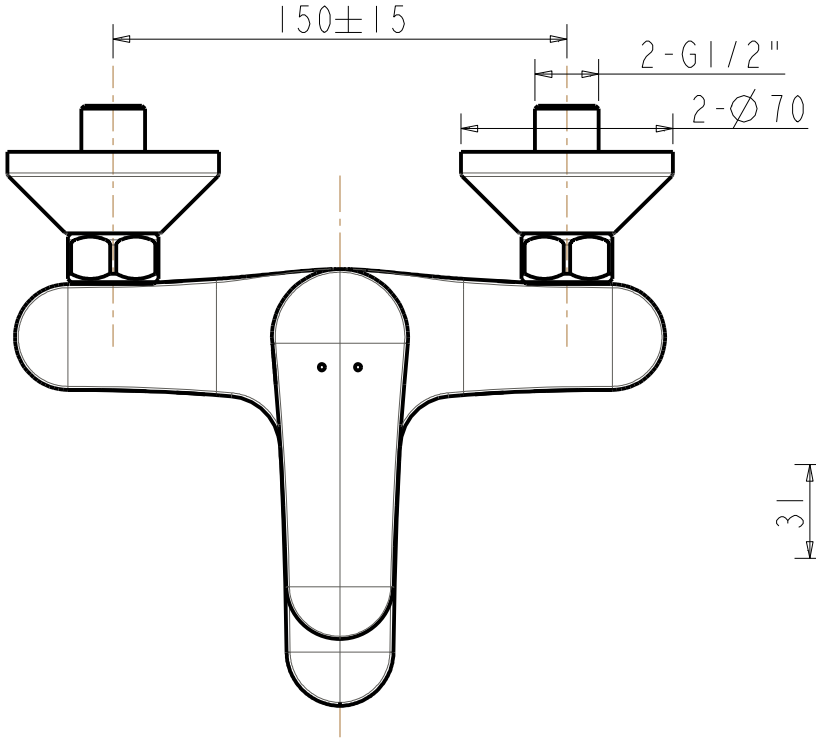
150±15
2-G1/2"
2-∅70

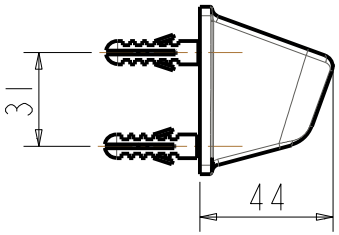
31
44

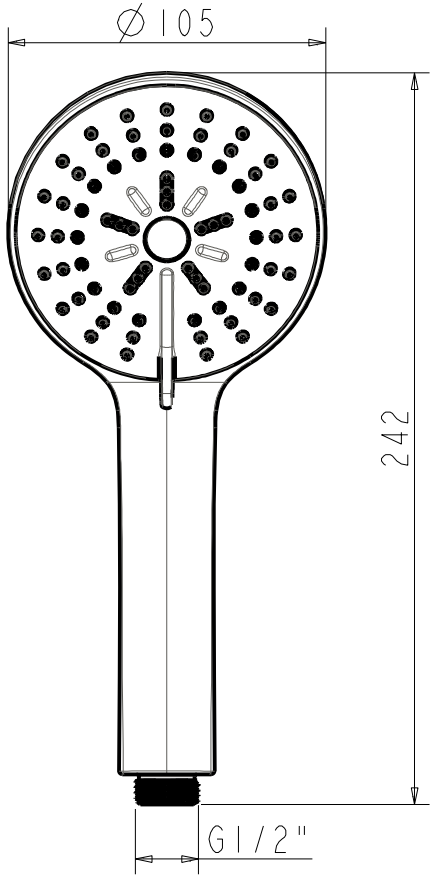
∅105
242
G1/2"