Thermostat

American Standard

FFAS4955-701500BT0

Easyset

EasySET Exposed Shower Auto Temperature Mixer with Integrated Rain shower Kit

STYLE SEGMENT

- Contemporary



KEY SPECIFICATIONS

- Product Description: EasySET Exposed Shower Auto Temperature Mixer with Integrated Rain shower Kit
- Product Dimensions: 945 x 465 x 135
- Exposed/Concealed Body: Exposed
- Finish: Chrome
- Flow Rate: 4.3 for hand shower,6 for shower head
- Water Pressure, Dynamic (MPa): N/A
- Water Pressure, Static (MPa): N/A
- Max Water Temperature (°C): 49
- Excluded Components: N/A

SHIPPING WEIGHT

- Net Weight: Contact us for more information
- Gross Weight: Contact us for more information

KEY TECHNOLOGIES AND FEATURES

HYGIENE

- Complies with American Standard Quality Standards

COMFORT

- Complies with American Standard Quality Standards

CONVENIENCE

- Complies with American Standard Quality Standards

DURABILITY

- Complies with American Standard Quality Standards

SUSTAINABILITY

- Complies with American Standard Quality Standards

SAFETY

- Complies with American Standard Quality Standards

OTHERS

- NIL

STANDARDS AND CERTIFICATIONS

- GB/T 2806-2017

Thermostat

FFAS4955-701500BT0

Easyset

EasySET Exposed Shower Auto Temperature Mixer with Integrated Rain shower Kit

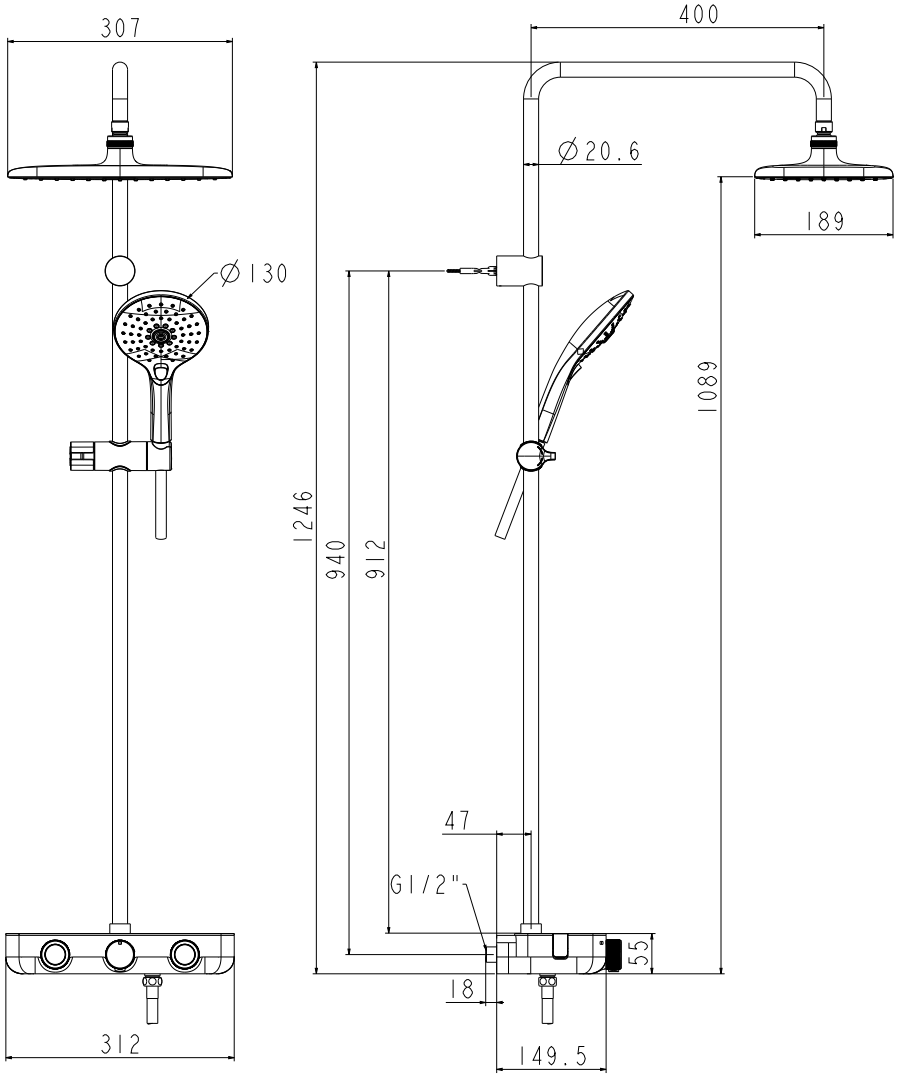

Thermostat

American Standard

FFAS4955-701500BT0

Easyset

EasySET Exposed Shower Auto Temperature Mixer with Integrated Rain shower Kit

Product	Description	EasySET Exposed Shower Auto Temperature Mixer with Integrated Rain shower Kit
	Weight (kg)	6.9
	Dimensions (mm)	945 x 465 x 135
	Finish	Chrome
	Flow Rate	4.3 for hand shower,6 for shower head
	Material	Brass
Body	Exposed/Concealed	Exposed
Water Pressure	Dynamic (MPa)	N/A
	Static (MPa)	N/A
Max Water Temperature	Temperature (°C)	49
Components	Included	N/A
	Excluded	N/A