Wash Basin

American Standard

CCASF633-0000410F0

Neo Modern

Neo Modern vessel

STYLE SEGMENT

- Modern

KEY SPECIFICATIONS

- Installation Type: Vessel
- Product Dimensions: 545 x 400 x 166
- Material: Fine Fire Clay
- Color: White Heat II
- Overflow Hole: Without
- Faucet Ledge: No
- Included Components: Drainage & cover



SHIPPING WEIGHT

- Net Weight: 10
- Gross Weight: 12

KEY TECHNOLOGIES AND FEATURES

HYGIENE

- Complies with American Standard Quality Standards

COMFORT

- Complies with American Standard Quality Standards

CONVENIENCE

- Complies with American Standard Quality Standards

DURABILITY

- Complies with American Standard Quality Standards

SUSTAINABILITY

- Complies with American Standard Quality Standards

SAFETY

- Complies with American Standard Quality Standards

OTHERS

- NIL

STANDARDS AND CERTIFICATIONS

- GB/T 6952-2015

Wash Basin

American Standard

CCASF633-0000410F0

Neo Modern

Neo Modern vessel

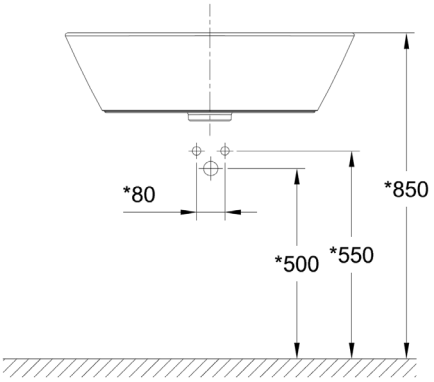

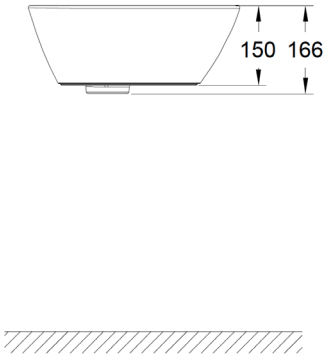

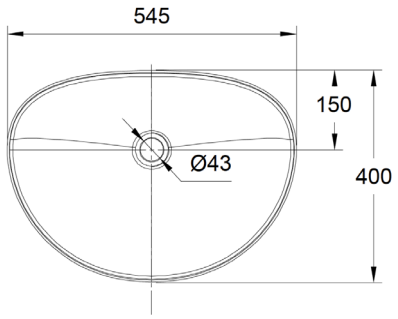

Wash Basin

American Standard

CCASF633-0000410F0

Neo Modern

Neo Modern vessel

Item	Description	Vessel
Installations	Type	Vessel
Dimensions	Product (mm)	545 x 400 x 166
Material & Color	Material	Fine Fire Clay
	Color	White Heat II
Features	Overflow Hole	Without
	Faucet Ledge	No
Components	Included	Drainage & cover
Shipping	Net Weight (kg)	10
	Gross Weight (kg)	12
	Product Weight (kg)	10
	Dimensions (mm)	587 x 440 x 224