Wash Basin

American Standard

CCASF513-1000410F0

Flexio

Square thin 600mm UC

STYLE SEGMENT

- Modern

KEY SPECIFICATIONS

- Installation Type: Undercounter
- Product Dimensions: 600 x 410 x 181
- Material: Fine Fire Clay
- Color: White Heat II
- Overflow Hole: With
- Faucet Ledge: No
- Included Components: Overflow ring, Bracket



SHIPPING WEIGHT

- Net Weight: 12
- Gross Weight: 14

KEY TECHNOLOGIES AND FEATURES

HYGIENE

- Complies with American Standard Quality Standards

COMFORT

- Complies with American Standard Quality Standards

CONVENIENCE

- Complies with American Standard Quality Standards

DURABILITY

- Complies with American Standard Quality Standards

SUSTAINABILITY

- Complies with American Standard Quality Standards

SAFETY

- Complies with American Standard Quality Standards

OTHERS

- NIL

STANDARDS AND CERTIFICATIONS

- GB/T 6952-2015

Wash Basin

American Standard

CCASF513-1000410F0

Flexio

Square thin 600mm UC

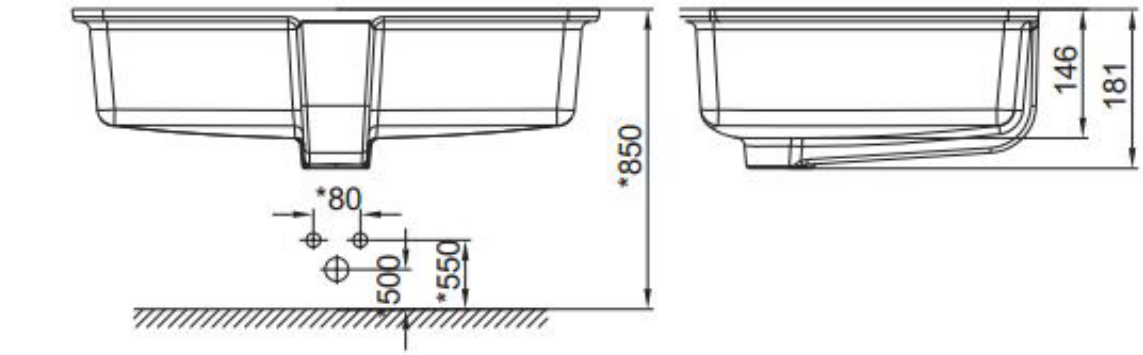

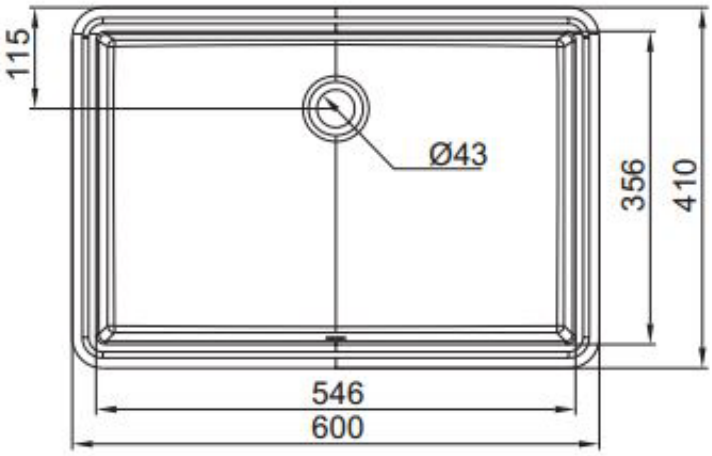

Wash Basin

American Standard

CCASF513-1000410F0

Flexio

Square thin 600mm UC

Item	Description	Under Counter
Installations	Type	Undercounter
Dimensions	Product (mm)	600 x 410 x 181
Material & Color	Material	Fine Fire Clay
	Color	White Heat II
Features	Overflow Hole	With
	Faucet Ledge	No
Components	Included	Overflow ring, Bracket
Shipping	Net Weight (kg)	12
	Gross Weight (kg)	14
	Product Weight (kg)	12
	Dimensions (mm)	639 x 445 x 221