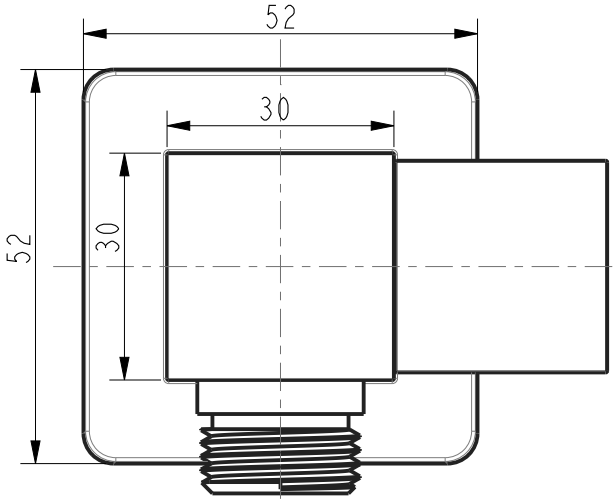
52
30
52
30

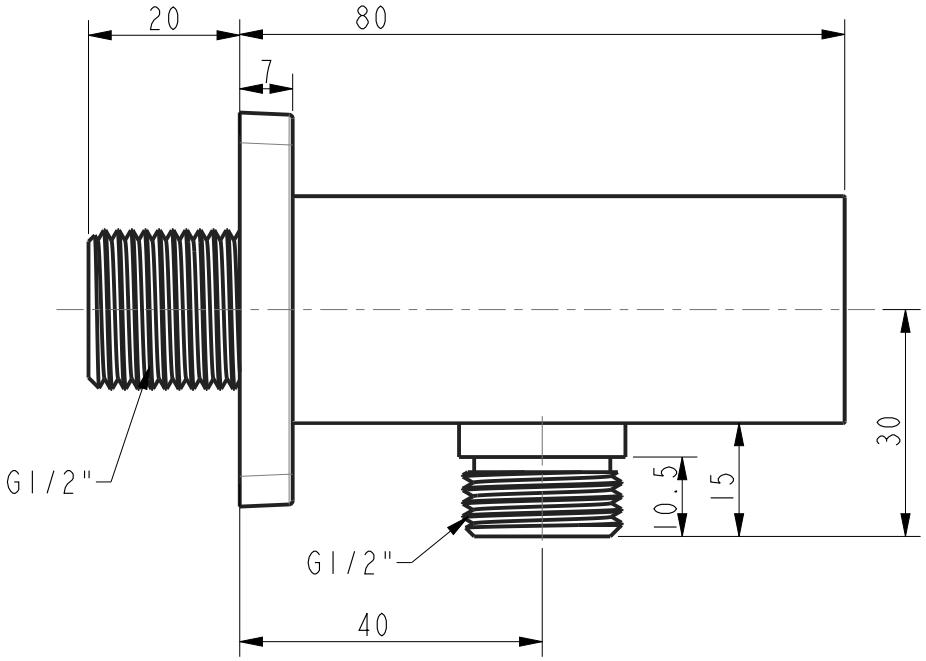
20
80
7
G1/2"
G1/2"
10.5
15
30
40

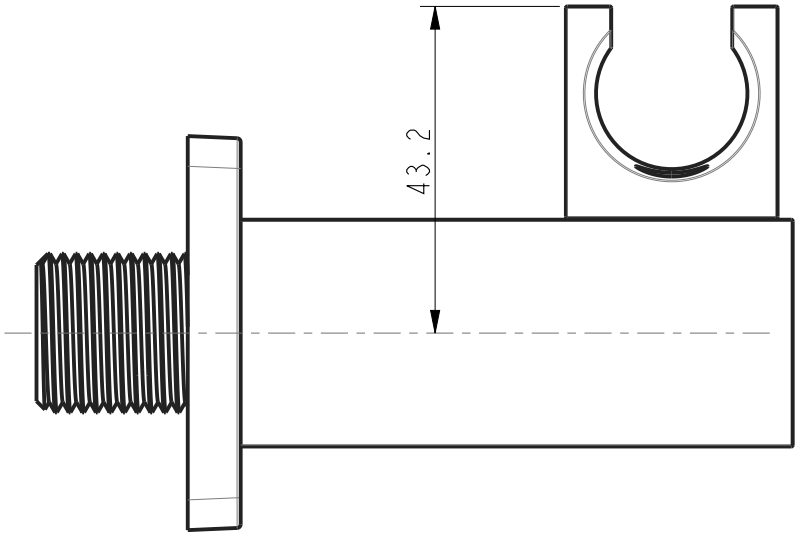
43.2