Toilet

American Standard

CL23075-6DACTCBT

Acacia Evolution

Acacia SupaSleek CC 2.6/4L CBR CP set WT

STYLE SEGMENT

- Modern



KEY SPECIFICATIONS

- Product Dimensions: 385 x 741 x 760
- Installation Type: Floor Mounted
- Flushing System: Double Vortex
- Flushing Platform: Washdown
- Flushing Type: Dual flush
- Flushing Volume: 2.6-4
- Trapway: S Trap
- Rough In: 305
- Trapway Design: Fully Skirted
- Bowl Shape: Elongated
- Water Pressure, Dynamic (MPa): 0
- Water Pressure, Static (MPa): 0.14-0.55
- Material: Vitreous China
- Color Availability: White

SHIPPING WEIGHT

- Net Weight: 56.7
- Gross Weight: 62.2

KEY TECHNOLOGIES AND FEATURES

HYGIENE

- Aqua Ceramic
- ComfortClean
- Double Vortex
- Power Rim

COMFORT

- Comfort Curve Seat
- Comfort Push Button
- Right Height

CONVENIENCE

- Easy Release
- Quick-Detach Seat Cover
- Skirted Design
- Slow-Closing Seat & Cover

DURABILITY

- Complies with American Standard Quality Standards

SUSTAINABILITY

- Dual Flush
- Water-Saving

SAFETY

- Complies with American Standard Quality Standards

OTHERS

- NIL

STANDARDS AND CERTIFICATIONS

- BS EN 997:2018
- TIS 792-2011

American Standard

CL23075-6DACTCBT

Acacia Evolution

Acacia SupaSleek CC 2.6/4L CBR CP set WT

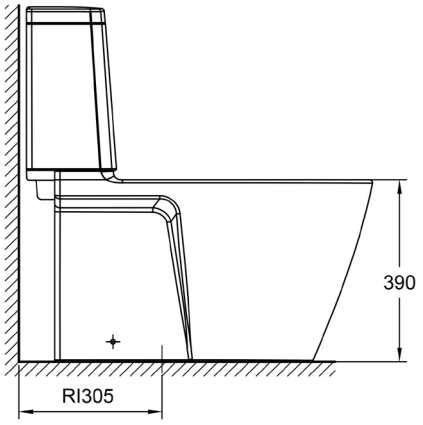

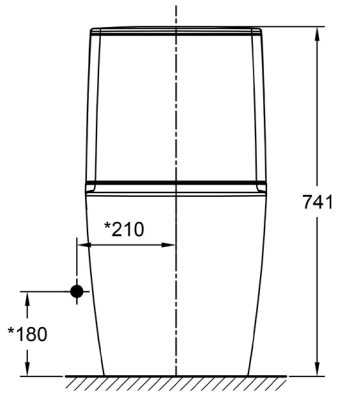

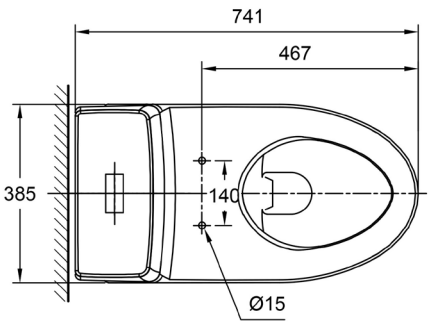

Toilet

American Standard

CL23075-6DACTCBT

Acacia Evolution

Acacia SupaSleek CC 2.6/4L CBR CP set WT

Item	Description	Acacia SupaSleek CC 2.6/4L CBR CP set WT
Dimensions	Product (mm)	385 x 741 x 760
Material & Color	Material	Vitreous China
	Color	White
Bowl	Shape	Elongated
Trapway	Type	S Trap
	Rough-in (mm)	305
	Design	Fully Skirted
Flushing	System	Double Vortex
	Type	Dual flush
	Platform	Washdown
	Volume	2.6-4
Water Pressure	Dynamic (MPa)	0
	Static (MPa)	0.14-0.55
Installation	Type	Floor Mounted

Toilet

American Standard

CL23075-6DACTCBT

Acacia Evolution

Acacia SupaSleek CC 2.6/4L CBR CP set WT

Components	Toliet Seat Included	Yes

Shipping	Net Weight (kg)	56.7
	Gross Weight (kg)	62.2
	Product Weight (kg)	56.93
	Dimensions (mm)	435 x 1000 x 560