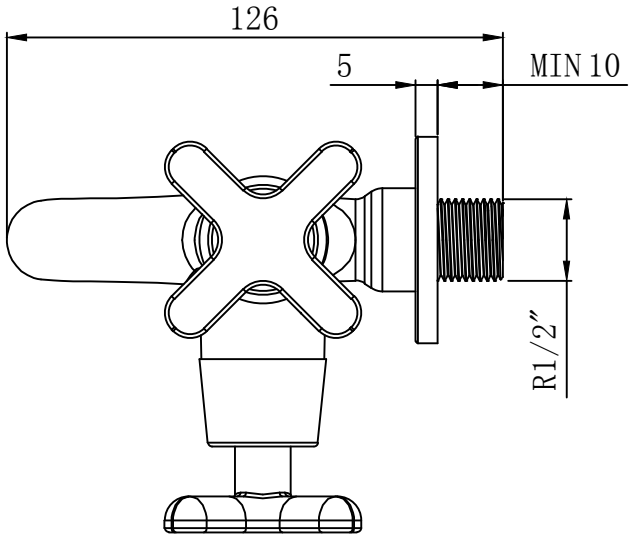

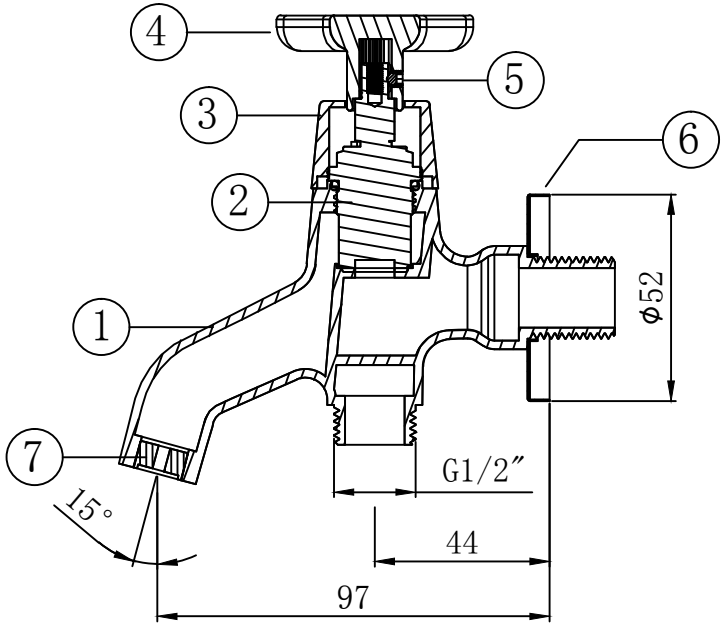

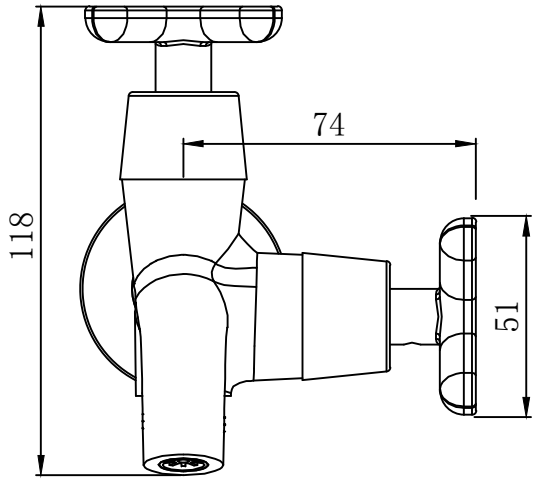

No	Part No	Part Name	Material	Qty
7	5802220	Aerator	PE	1
6	5401026J36	Rosette	SUS	1
5	5604011	Allen Screw	SUS	2
4	H02450016D01	Cross Handle	Zamak	2
3	H02450015D01	Rosette	ABS	2
2	5301062	Cartridge	Brass	2
1	H02460001D01	Body	Brass	1

Part No	H02480013D01	edition	A	FFAST703-6T1500BT0	Unit	MM	Remark:
Designed	Mak	Date	2016.10		Finish		
Checked		Date		Exposed Bath & Shower Mono (Cross Handle)	Material		开平美迪晨卫浴有限公司 MADISON SANITARY FITTINGS CO.,LTD
Approved		Date			Scale		