Tolerance, Unless Otherwise Stated. Is	
Above 0.5 to and including 6	±0.1
Excess 6 to and including 30	±0.2
Excess 30 to and including 120	±0.3
Excess 120 to and including 315	±0.5
Excess 315 to and including 1000	±0.8
Excess 1000 to and including 2000	±1.2

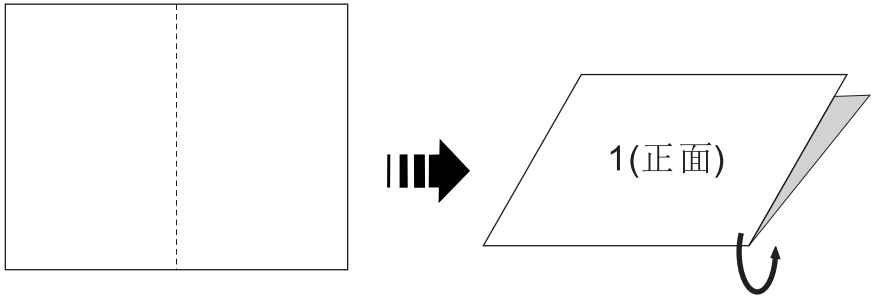

1. 说明书双面印刷完成
（297x210=A4）共1页

2. 说明书折叠完成

制作说明：

1. 说明书完成的尺寸：148*210
2. 材料：80克的白色纸
3. 印刷说明：说明书为297x210(A4) 双面印刷，并折叠成148x210大小完成(详看图示)
4. 印刷颜色：黑白
5. 印刷时，内容准确，清晰，墨色均匀，表面清洁。

				DESIGN			TITLE Instructions	
				CHECKED			REF 英文说明书 FFAS0904–102500BF0 Milano In–Wall Basin Mixer	
				APPROVED				
A1	改为新AS Logo American Standard	2017.07		SCALE	MATERIAL	WEIGHT	DWG NO. FF1–CN521K00053499	American Standard
REV	DESCRIPTION	DATE	NAME	1:1				

Test / Usage

1 Test

* Turn handle to “OFF”position. Open Water supply valve to check all connections for leakage;
* Turn handle to “ON” position. Check the water flow .

2 Usage

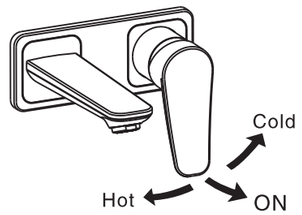

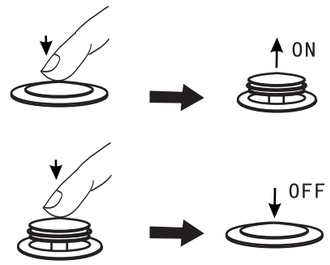

Press–Action Pop–up Drain

Trouble Shooting Guide

Trouble	Checkpoint	Contents	Action
Poor flow rate	Aerator	Check any impurities.	Remove all impurities.
	Water Supply valve	Check water supply valve open position.	Open it to full water supply valve
	Flexible Hose	Check if flexible hose is twisted.	Untwist the flexible hose.
Leakage	Cartridge	Check cartridge packing.	When packing is damaged, replace the cartridge.
	Flexible Hose Connection	Check if the packing is losed. Check if the connection become loosen	Check the existence of packing and fix it again

Care & Maintenance

* If you want to change the parts or clean the inside of the faucet, please follow the steps to remove the components.

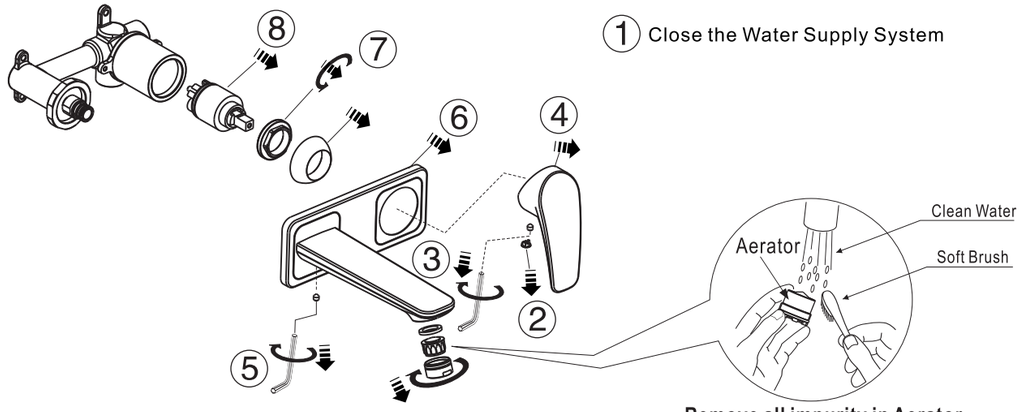

Remove all impurity in Aerator

Attention:
Please Leave the manual to the customer after installation is finished.

Milano

FFAS0904–102500BF0
Milano In–Wall Basin Mixer

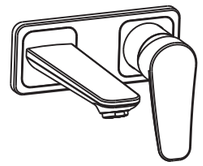

American Standard

Installation & Operation Instructions

Thank you for selecting American-Standard - the benchmark of fine quality for over 100 years.
To ensure that your installation proceeds smoothly--please read these instructions carefully before you begin.

* American Standard always keep raising and improving the product design and performance, and reserve the right to modify the dimension and spefication. At this case, we will not inform you separately.
* This installation instruction sheet is for your reference only, the dimension and specification is subject to the actual products.

Pre-Installation Checks

*** All instruction procedures must comply in strict accordance with applicable local plumbing and building codes**
*** Remove all impurity in pipes before beginning to avoid clogging. Connect faucet pipes correctly.**
*** Check installation the Dimension Drawing to ensure to install it correctly.**

Conditions for use

*** Recommended water pressure: 0.1~0.5Mpa.**
*** Environment Temperature:1~55℃**
*** Steam is not allowed.**

During installation of the faucet, Please grab the body. Do not grab handle only.

Recommended Tools and Materials

Dimension

Unit: mm

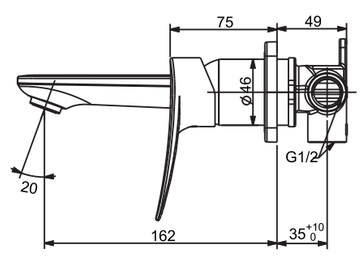

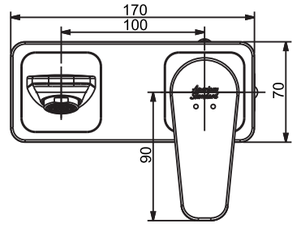

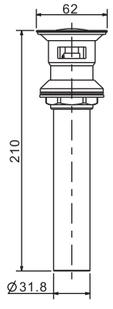

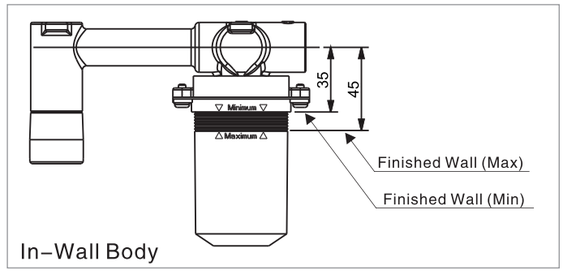

Rev. FF1–CN521K00053499/A1

Parts List

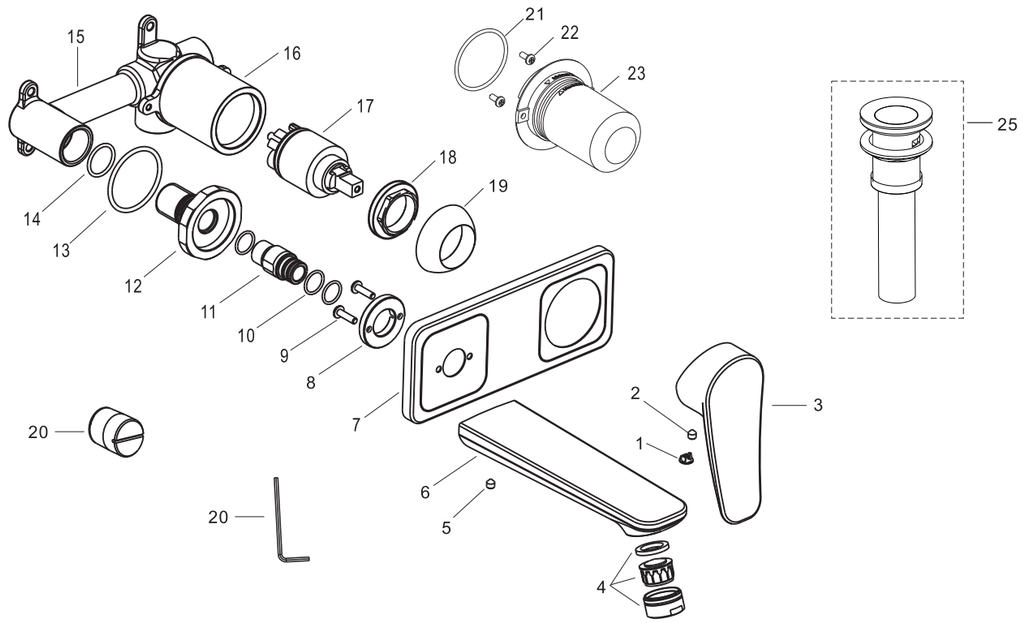

Parts List

No.	Part Name	Q'ty	No.	Part Name	Q'ty
1	Index Botton	1	14	O–Ring	1
2	Screw	1	15	Body	1
3	Handle	1	16	Bush	1
4	Aerator	1	17	Cartridge	1
5	Screw	1	18	Nut	1
6	Spout	1	19	Cap	1
7	Escutcheon	1	20	In–hex Wrench	1
8	Washer	1	21	O–Ring	1
9	Screw	2	22	Screw	2
10	O–Ring	3	23	Protection Cover	1
11	Connector	1	24	Plug	1
12	Connector	1	25	Drain	1
13	O–Ring	1			

Installation

1 Preparation

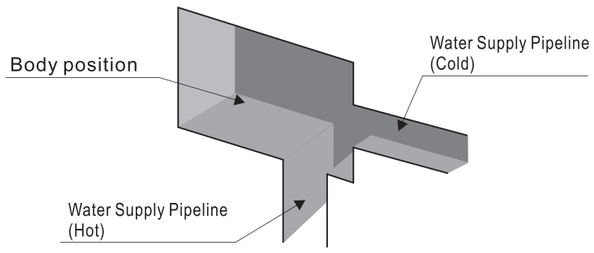

1 * Consult the dimension drawing and lay the pipes.
* Digging pit slot.

* Wash and clean the water supply pipeline.

2 Installing the Body

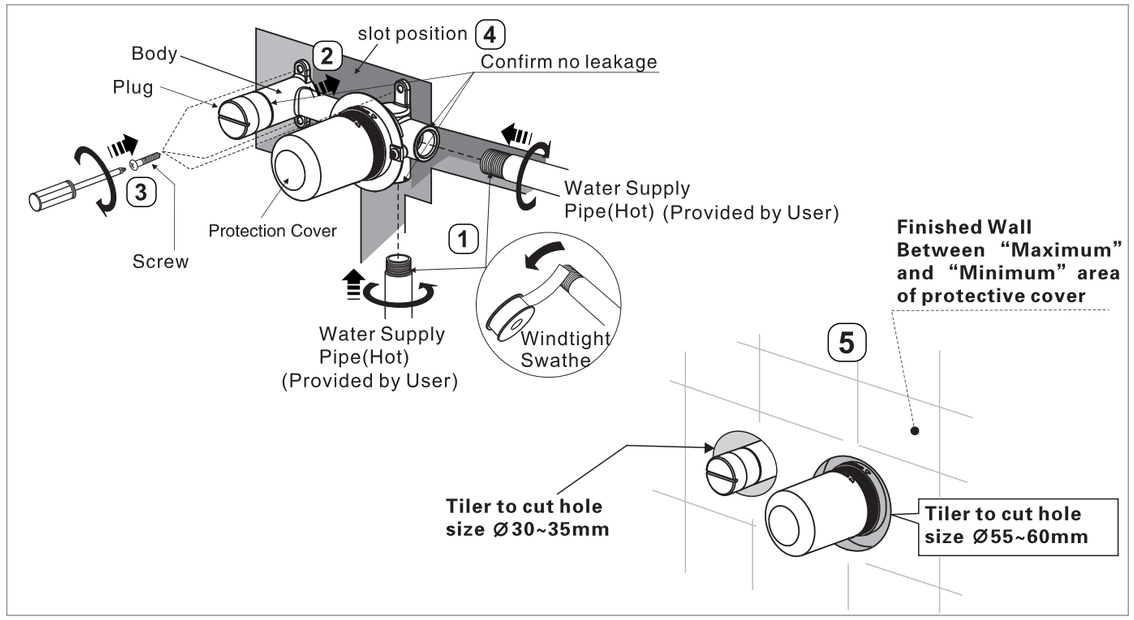
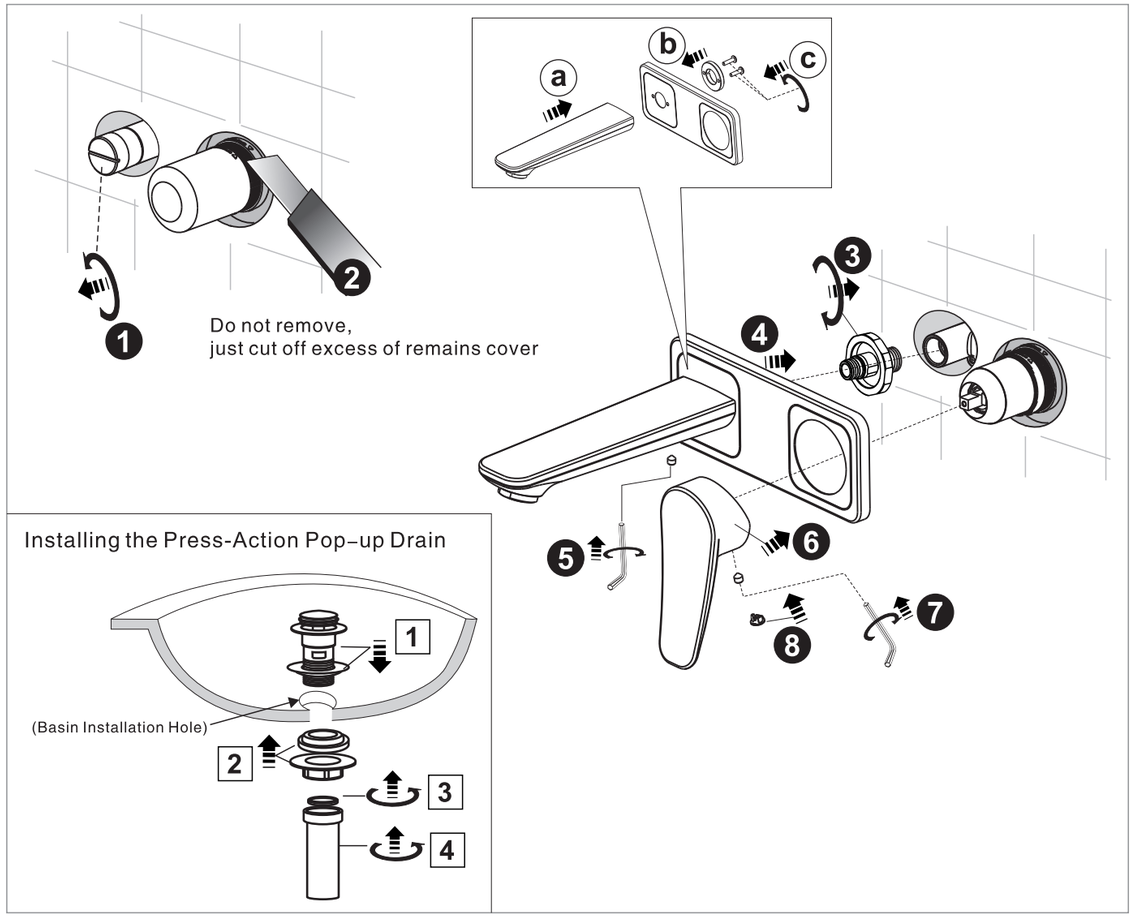
3 Installing the Spout and Handle