Tolerance, Unless Otherwise Stated. Is	
Above 0.5 to and including 6	±0.1
Excess 6 to and including 30	±0.2
Excess 30 to and including 120	±0.3
Excess 120 to and including 315	±0.5
Excess 315 to and including 1000	±0.8
Excess 1000 to and including 2000	±1.2

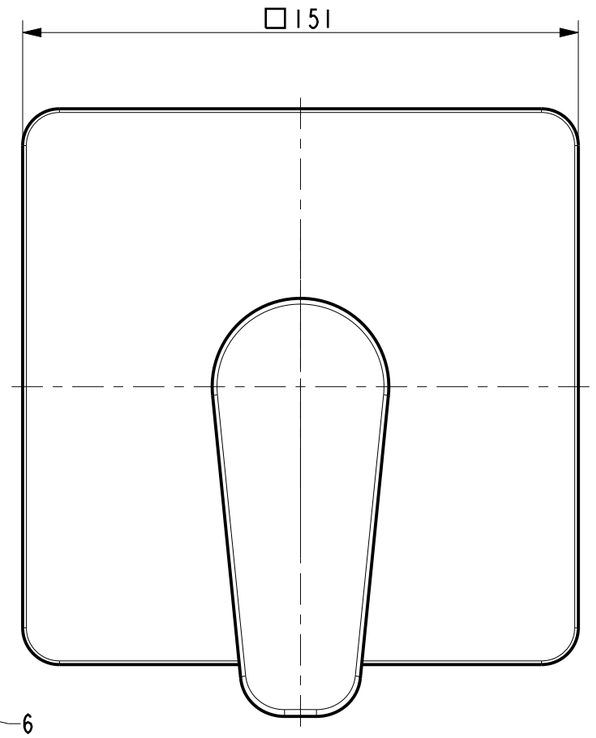

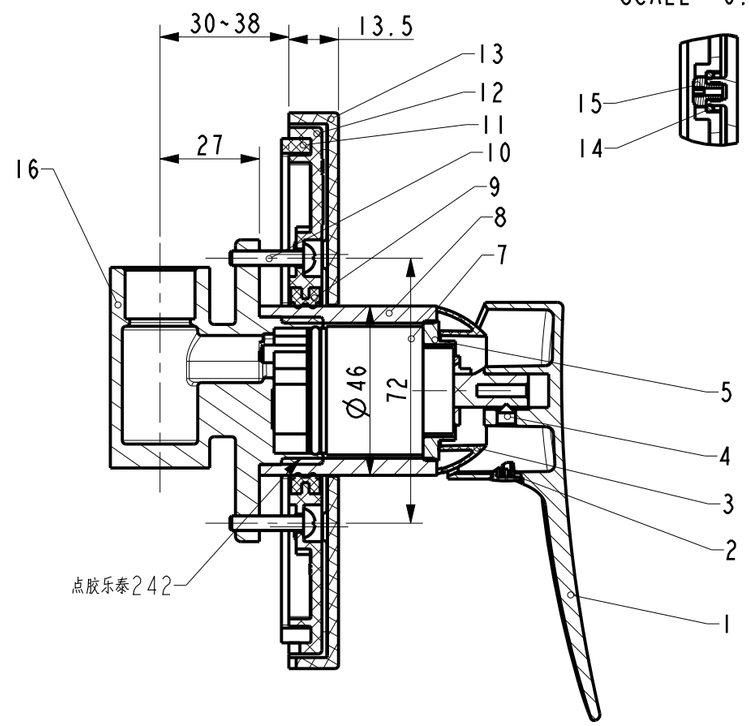

SECTION A-A

SECTION B-B
SCALE 0.600

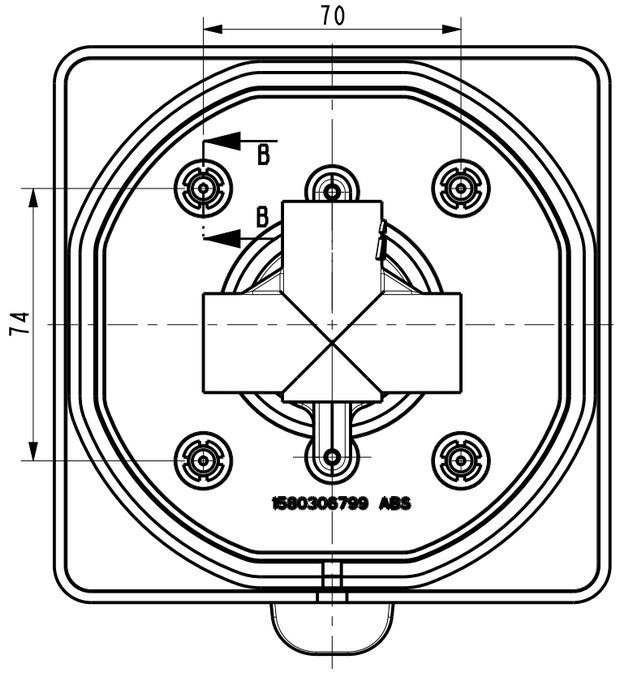

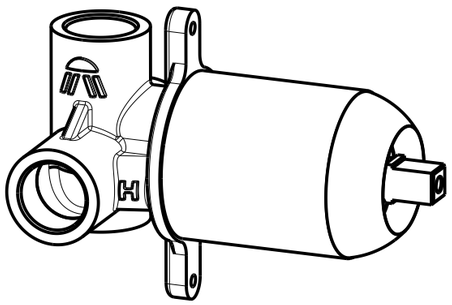

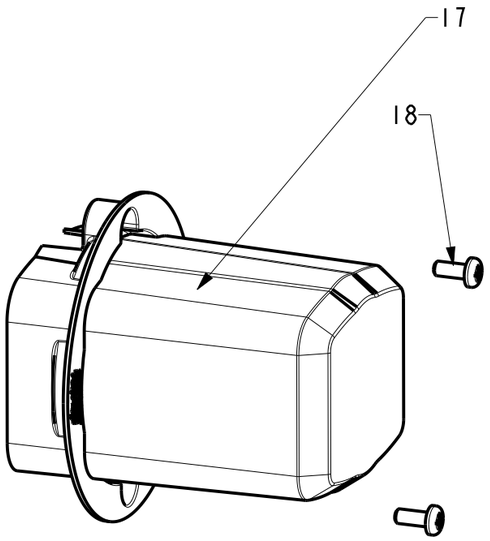

No.	Part No.	Part Name	Qty	Material	Finish
18	FF1-CN521N00000194	2002 Screw	2	SUS304	
17	FF1-CN521Z00000212	Protect Cover	1	PA	
16	FF1-CN521B00000055	Body	1	DZR Brass	
15	FF1-CN521J00000214	Fix Pin	4	HPb59-1	
14	FF1-CN521G00000291	O-Ring(7X2)	4	NBR70	
13	FF1-CN521F00000265	Escutcheon	1	ABS	Chrome
12	FF1-CN521F00000014	Fixing Plate	1	ABS	
11	FF1-CN521K00000034	Foam Washer	1	E.V.A	
10	FF1-CN521N00000268	Screw M5*6	2	SUS304	
9	FF1-CN521G00000206	Φ46 Seal Ring (56*45*8)	1	NBR70	
8	FF1-CN521J00000305	Brass Bushing	1	HPb59-1	Chrome
7	FF1-CN521C00000018	35# High floor Cartridge	1	Part	
6	FF1-CN521Z00000254	In-Hex Wrench	1	HPb59-1	
5	FF1-CN521N00000091	Lock Nut	1	POM	
4	FF1-CN521N00000228	Screw M5*6	1	SUS304	
3	FF1-CN521F00000026	CARTRIDGE COVER	1	ABS	Chrome
2	FF1-CN521Z00000086	Index Button	1	ABS	
1	FF1-CN521L00000045	Handle	1	ZZnAl4-1	Chrome

DESIGNED			TITLE
CHECKED			REF Milano concealed shower mixing valve
APPROVED			
SCALE	MATERIAL	WEIGHT	DWG NO.
3:5	Assembly		FFAS0922-702500BF0

American Standard

REV	DESCRIPTION	DATE	NAME