Tolerance, Unless Otherwise Stated. Is		
Above	0.5 to and including 6	±0.1
Excess	6 to and including 30	±0.2
Excess	30 to and including 120	±0.3
Excess	120 to and including 315	±0.5
Excess	315 to and including 1000	±0.8
Excess	1000 to and including 2000	±1.2

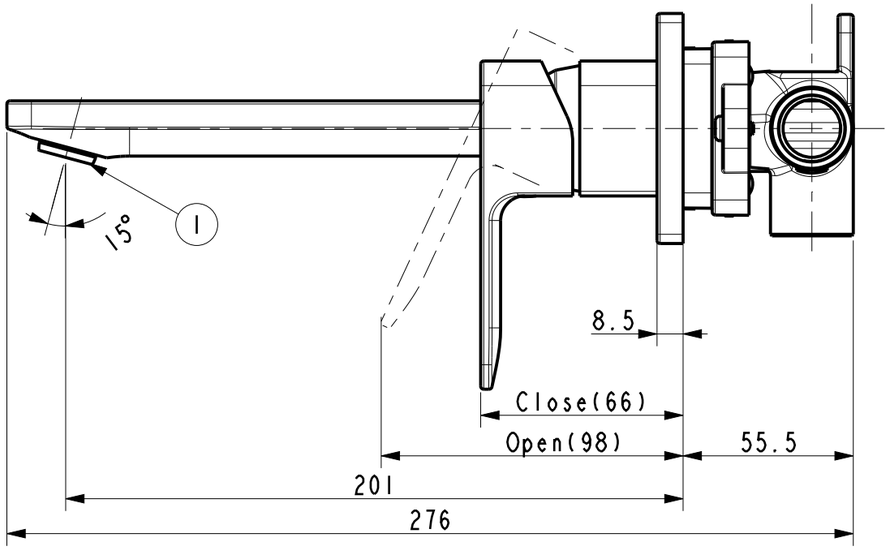

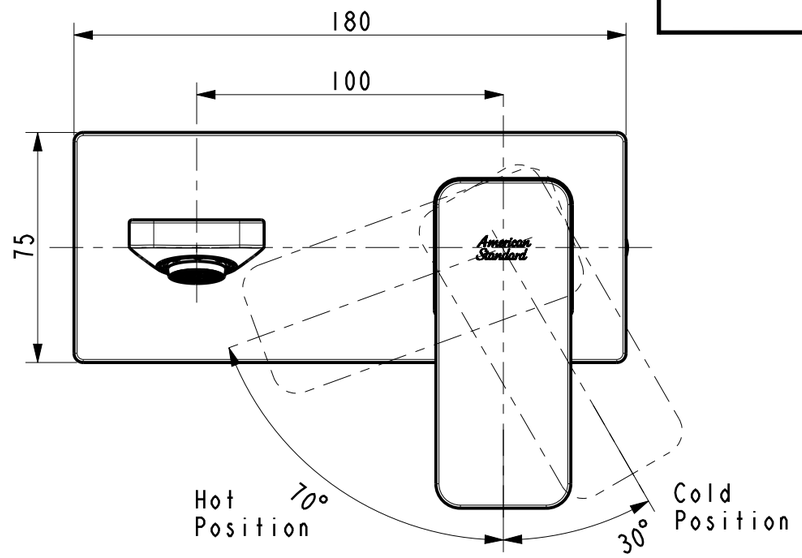

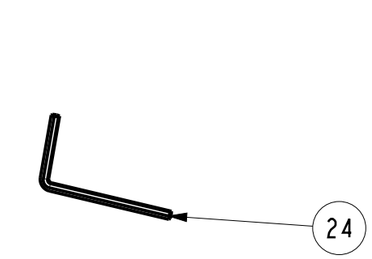

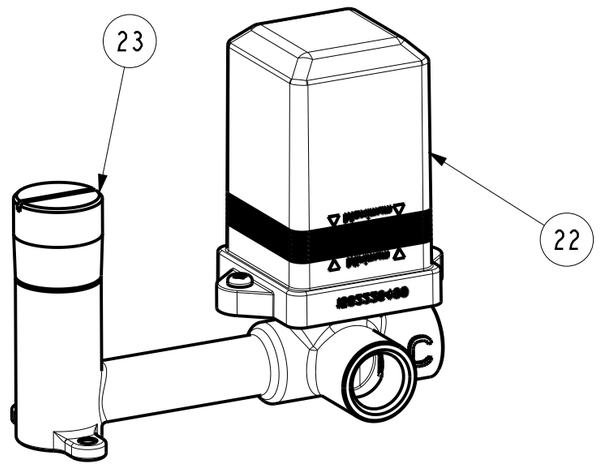

SCALE 0.500

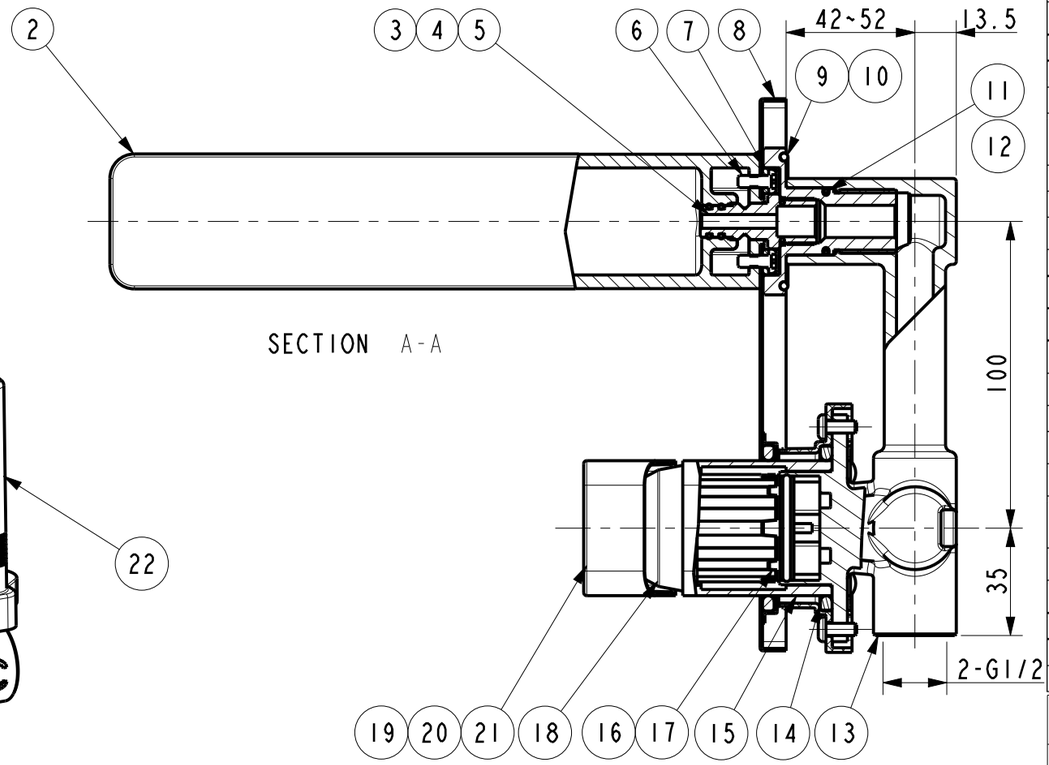

SECTION A-A

No.	Part Code	Part Name	Qty	Material	Remark
24	FF1-CN521Z00000254	In-Hex Wrench for H01 Mixer	1	Q235	
23	FF1-CN521Z00000310	Plug for New Mass In-wall	1	PP	
22	FF1-CN521J00000556	Protect Cover for Acacia E	1	PP	
21	FF1-CN521N00000228	Screw for Celia Lever M5×6	1	SUS304	
20	FF1-CN521Z00000086	Index Button for TONIC Fitting line	1	ABS	
19	FF1-CN521L00000191	Handle for Acacia E SH Basin Mixer	1	ZZnAl4-1	
18	FF1-CN521F00000034	Cartridge Cover for Sgl Hole FT	1	ABS	
17	FF1-CN521N00000091	Lock Nut for Minimalistic InWall B&S Faucet	1	HPb59-1	
16	FF1-CN521C00000057	35# ECO Cartridage（KN-35 ECP)	1	Assembly	
15	FF1-CN521J00000554	Brass Bushing for Acacia E	1	HPb59-1	
14	FF1-CN521G00000362	Sealing Ring For Acacia E	2	NBR70	
13	FFZZ1304-10150BDMC	Body for A41 In-Wall Lava Faucet	1	GkMs60Fk	
12	FF1-CN521G00000251	O-Ring ϕ17×ϕ2	1	NBR70	
11	FF1-CN521G00000289	O-Ring ϕ11×ϕ1.5	1	NBR70	
10	FF1-CN521G00000361	O-RING-ϕ39.34×ϕ2.62,N	1	NBR70	
9	FF1-CN521J00000304	Connect plate for New Mass	1	HPb59-1	
8	FF1-CN521F00000281	Escutcheon for Acacia E	1	H62	
7	FF1-CN521F00000015	Fixing plate for New Mass	1	HPb59-1	
6	FF1-CN521N00000194	2002 Screw (Zinc)	10	SUS304	
5	FF1-CN521N00000187	Set Screw for Acacia Single Hole Faucet	1	SUS304	
4	FF1-CN521G00000104	O-Ring ϕ6.5×ϕ1.7	2	NBR70	
3	FF1-CN521J00000552	Adaptor For Acacia E In-wall	1	HPb59-1	
2	FFZZ1304-10150BPPL	Spout for A41 In-Wall Lava Faucet	1	GkMs60Fk	
1	FF1-CN521A00000102	M24X1 SLIM Air SSR Aerator（4 Star)	1	Assembly	

REV	DESCRIPTION	DATE	NAME

DESIGNED			TITLE
CHECKED			REF Acacia E In-Wall Basin Mixer
APPROVED			
SCALE	MATERIAL	WEIGHT	DWG NO.
0.500	Assembly		FFAS1304-102500BF0

American Standard