Tolerance, Unless Otherwise Stated. Is		
Above	0.5 to and including 6	±0.1
Excess	6 to and including 30	±0.2
Excess	30 to and including 120	±0.3
Excess	120 to and including 315	±0.5
Excess	315 to and including 1000	±0.8
Excess	1000 to and including 2000	±1.2

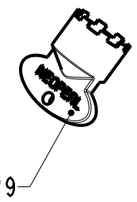

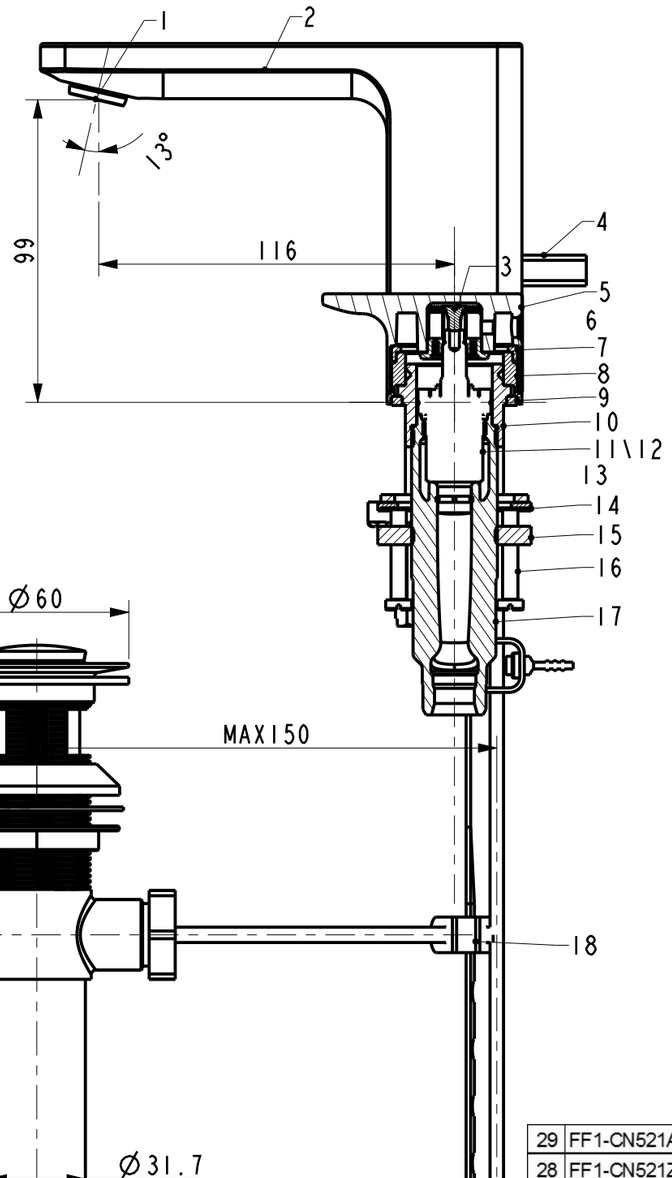

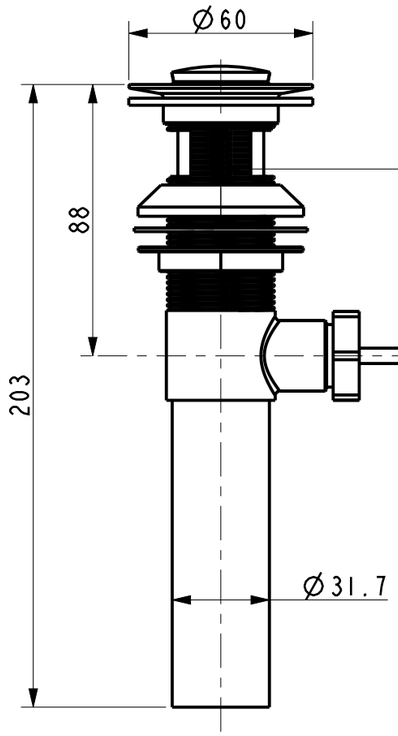

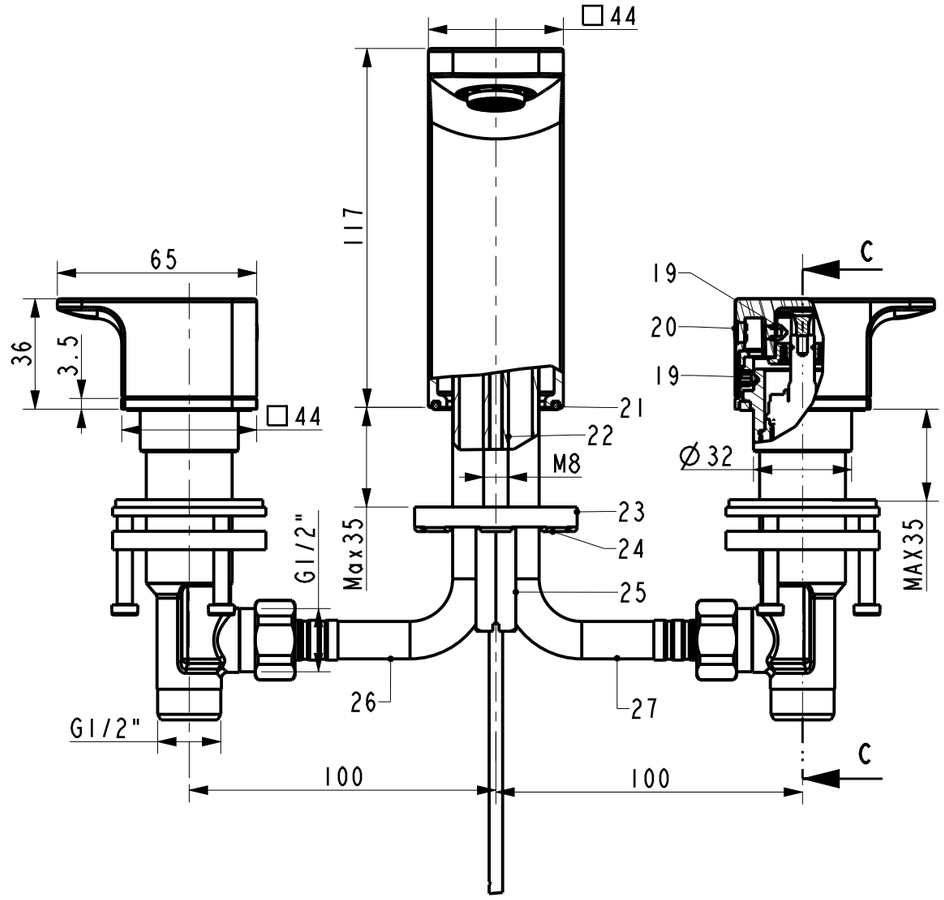

No.	Part No.	Part Name	Qty	Material	Finish
29	FF1-CN521A00000097	M24X1 SLIM Aerator Key	1	PA66	
28	FF1-CN521Z00000254	In-Hex Wrench	1	Q235	
27	FF1-CN521T00000018	The Flexible Pipe	1	Assembly	
26	FF1-CN521T00000017	The Flexible Pipe	1	Assembly	
25	FF1-CN521N00000073	Lock Nut	2	HPb59-1	
24	FF1-CN521F00000064	Fix Plate	2	SUS304	
23	FF1-CN521G00000092	Rubber Washer	2	NBR	
22	FF1-CN521Z00000438	MOUNTING STUD	1	SUS304	
21	FF1-CN521G00000159	O-Ring 37*2.5	1	NBR	
20	FF1-CN521Z00004950	Plug for handle	2	ABS	Chrome
19	FF1-CN521N00000228	Screw M5*6	6	SUS304	
18	FF1-CN521X00000627	Drain For Wash Basin	1	Assembly	
17	FFZZ0200-60150BDMC	Side Valve	2	GkMs60Fk	
16	FF1-CN521J00000416	Bolt	6	SUS304	
15	FF1-CN521N00000220	Nut	2	Hpb59-1	
14	FF1-CN521W00000045	Brass Washer	2	HPb59-1	
13	FF1-CN521G00000035	Flat Washer	2	NBR	
12	FF1-CN521C00000048	CARTRIDGE A/CL CLOS	1	Assembly	
11	FF1-CN521C00000049	CARTRIDGE CL CLOSE	1	Assembly	
10	FF1-CN521G00000366	Handle washer	2	HPb59-1	
9	FF1-CN521G00000234	PACKING	2	NBR	
8	FF1-CN521J00000547	Handle Seat	2	HPb59-1	Chrome
7	FF1-CN521J00000549	Handle Plastic Washer	2	POM	
6	FF1-CN521Z00000348	Adapter	2	POM	
5	FF1-CN521L00000192	Handle	2	ZZnAl4-1	Chrome
4	FF1-CN521X00000011	Pop-Up Assembling	1	Assembly	
3	FF1-CN521N00000154	Screw M4	2	Hpb59-1	
2	FFZZ1303-10150BDPL	Body	1	GkMs60Fk	Chrome
1	FF1-CN521A00000102	M24X1 Aerator (2.2gpm)	1	Assembly	

REV	DESCRIPTION	DATE	NAME

DESINGED			TITLE
CHECKED			REF Acacia Evolution 3-Hole Basin Mixer with Pop-up Drain
APPROVED			
SCALE	MATERIAL	WEIGHT	DWG NO.
1:2	Assembly		FFAS1303-101500BF0

American Standard