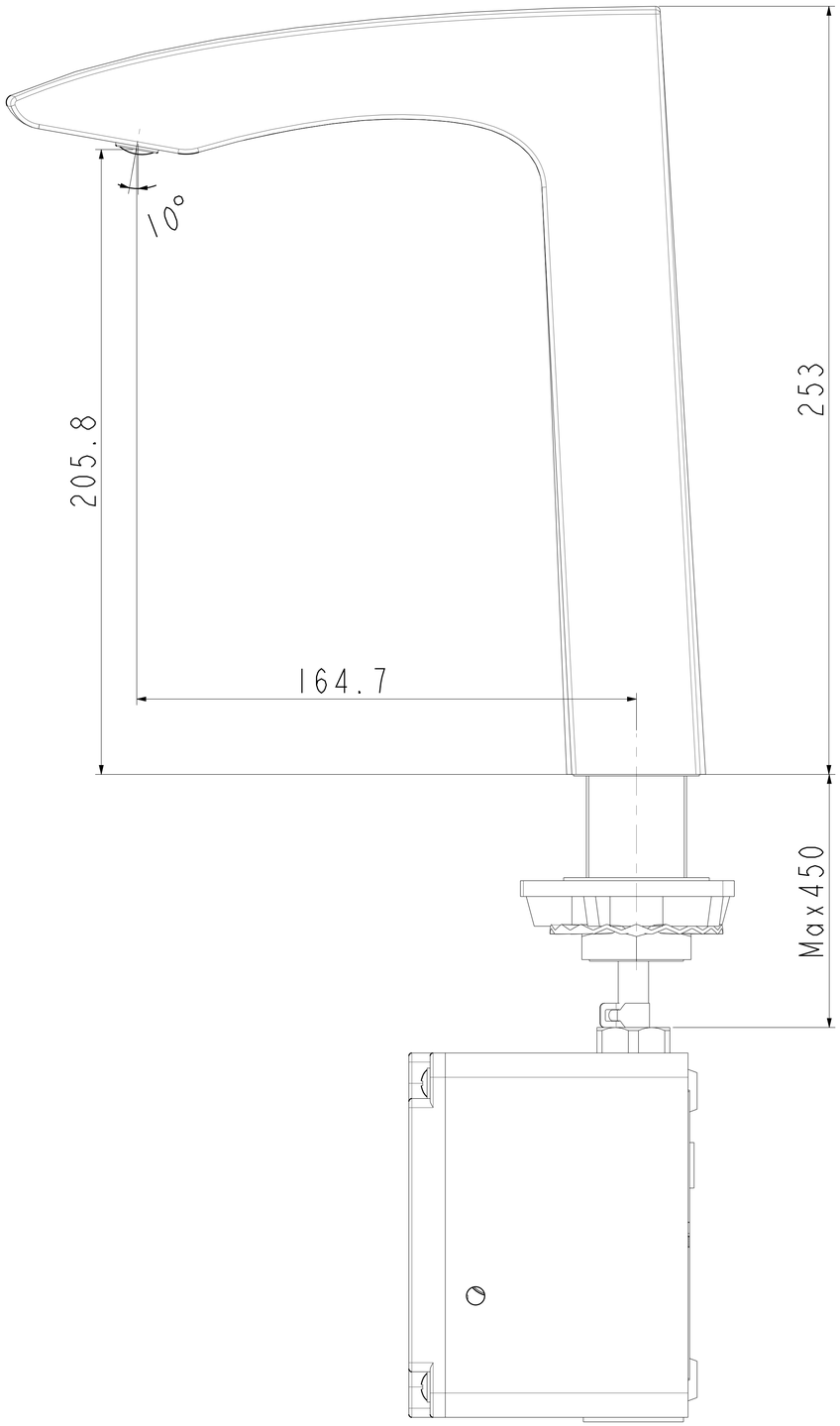
10°
205.8
253
164.7
Max450

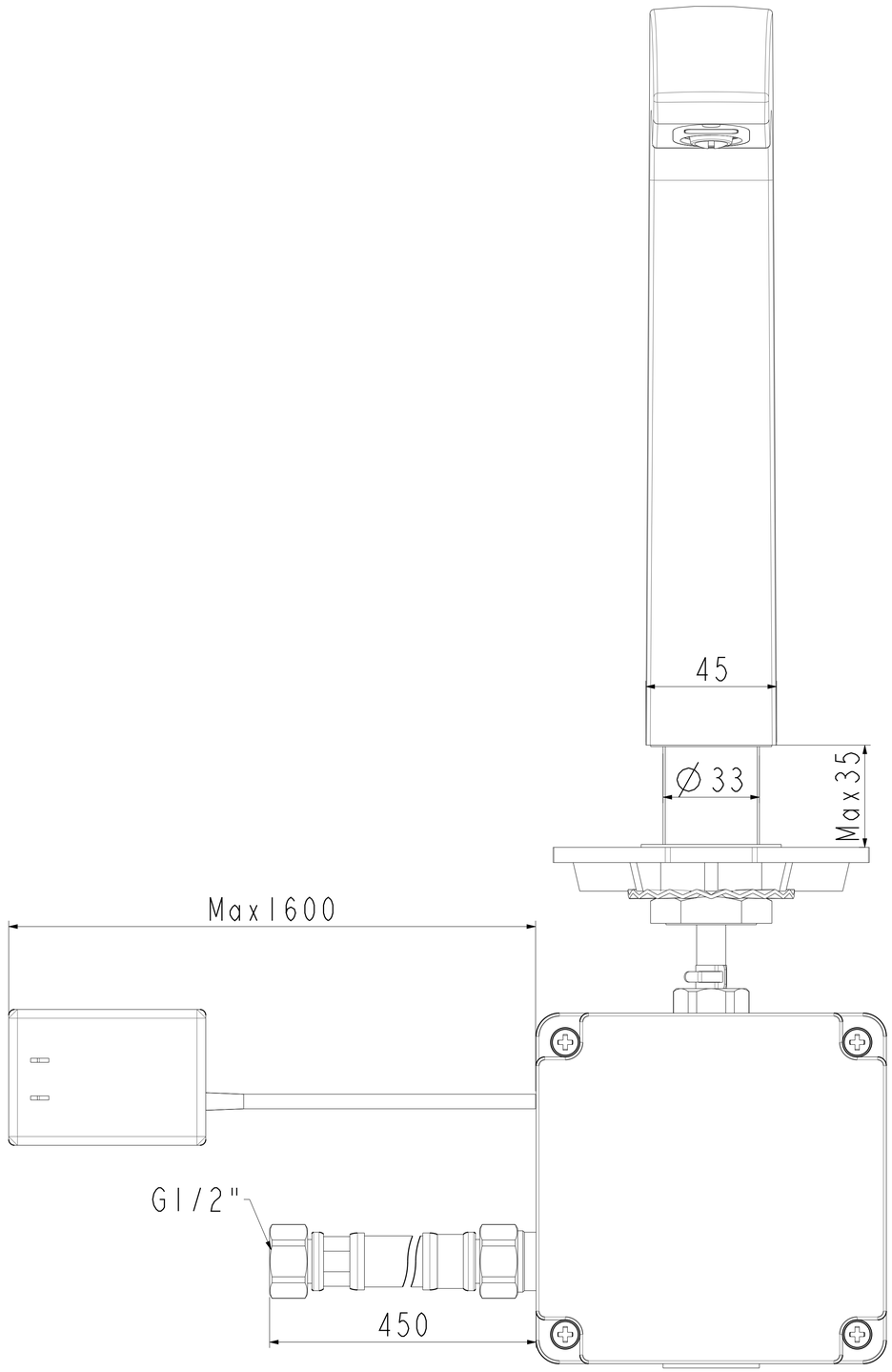
45
Ø33
Max35
Max1600
G1/2"
450