Wash Basin

American Standard

CL0507I-6DACTLA

Acacia Evolution

Acacia E Above basin 60cm. WT

STYLE SEGMENT

- Modern

KEY SPECIFICATIONS

- Installation Type: Vessel
- Product Dimensions: 460 x 600 x 181
- Material: Vitreous China
- Color: White
- Overflow Hole: With
- Faucet Ledge: Yes
- Included Components: Overflow Plug, Installation Template



SHIPPING WEIGHT

- Net Weight: 20.5
- Gross Weight: 22.1

KEY TECHNOLOGIES AND FEATURES

HYGIENE

- Complies with American Standard Quality Standards

COMFORT

- Complies with American Standard Quality Standards

CONVENIENCE

- Complies with American Standard Quality Standards

DURABILITY

- Complies with American Standard Quality Standards

SUSTAINABILITY

- Complies with American Standard Quality Standards

SAFETY

- Complies with American Standard Quality Standards

OTHERS

- NIL

STANDARDS AND CERTIFICATIONS

- TIS 791-2565

Wash Basin

American Standard

CL0507I-6DACTLA

Acacia Evolution

Acacia E Above basin 60cm. WT

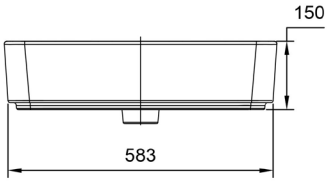

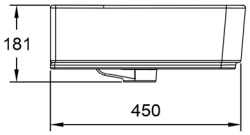

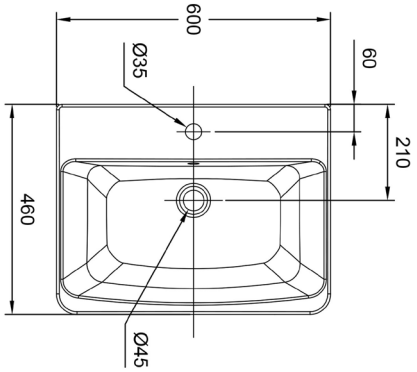

Wash Basin

American Standard

CL0507I-6DACTLA

Acacia Evolution

Acacia E Above basin 60cm. WT

Item	Description	Acacia E Above Lavatory 600 mm
Installations	Type	Vessel
Dimensions	Product (mm)	460 x 600 x 181
Material & Color	Material	Vitreous China
	Color	White
Features	Overflow Hole	With
	Faucet Ledge	Yes
Components	Included	Overflow Plug, Installation Template
Shipping	Net Weight (kg)	20.5
	Gross Weight (kg)	22.1
	Product Weight (kg)	20.5
	Dimensions (mm)	650 x 210 x 505