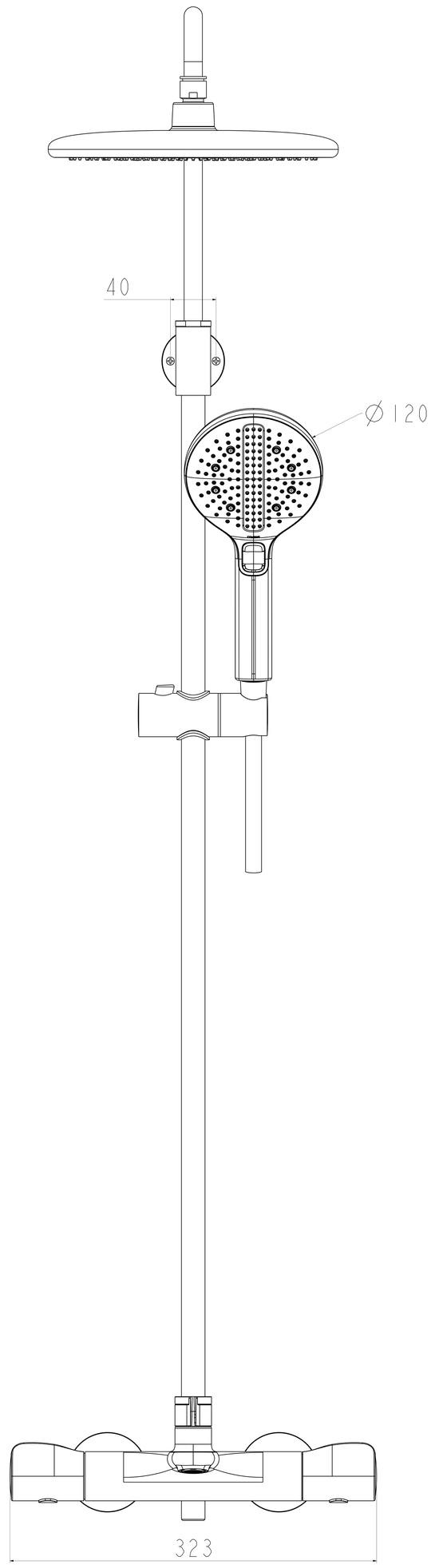
40
∅120
323

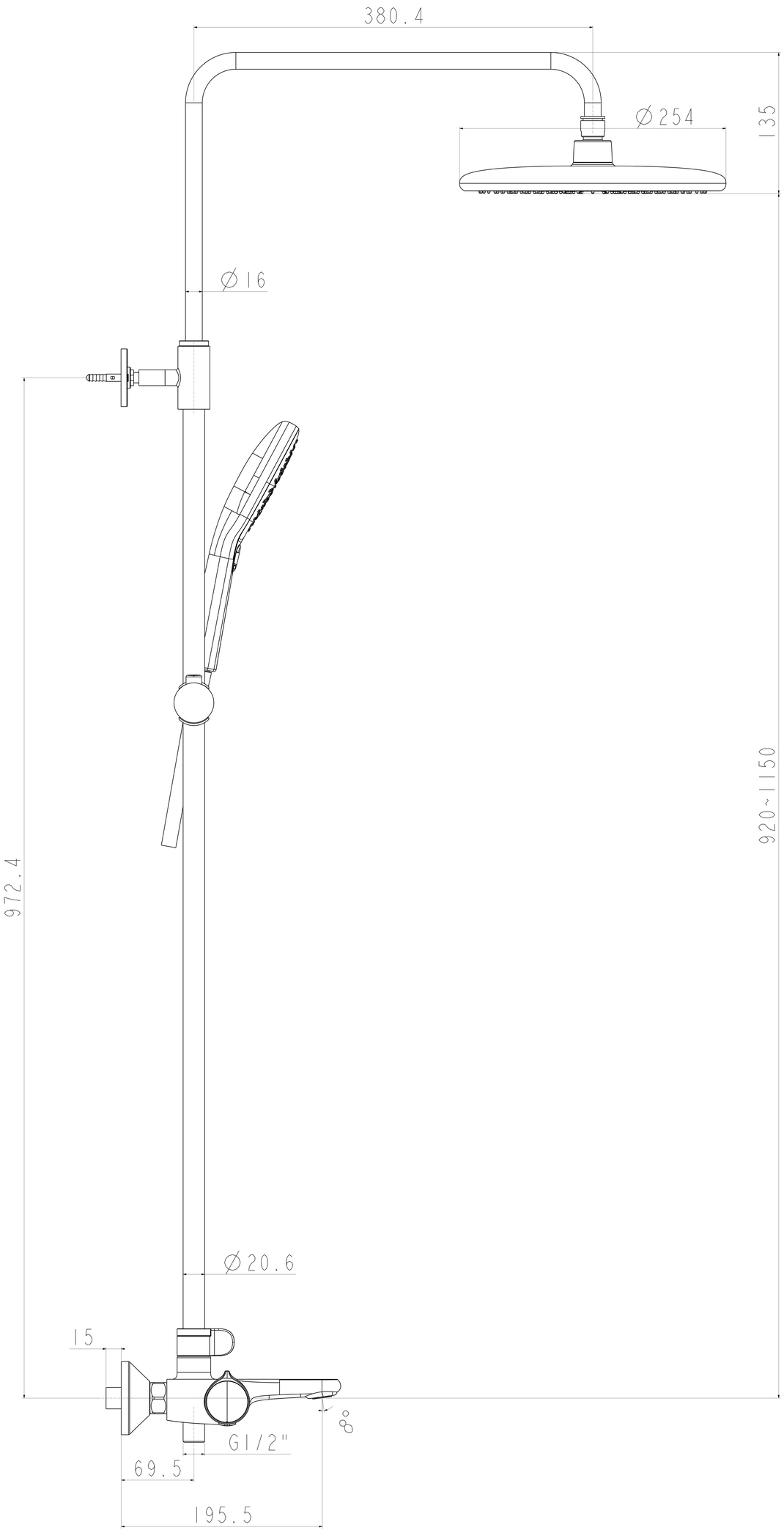
380.4
∅254
135
∅16
920~1150
972.4
∅20.6
15
8°
G1/2"
69.5
195.5

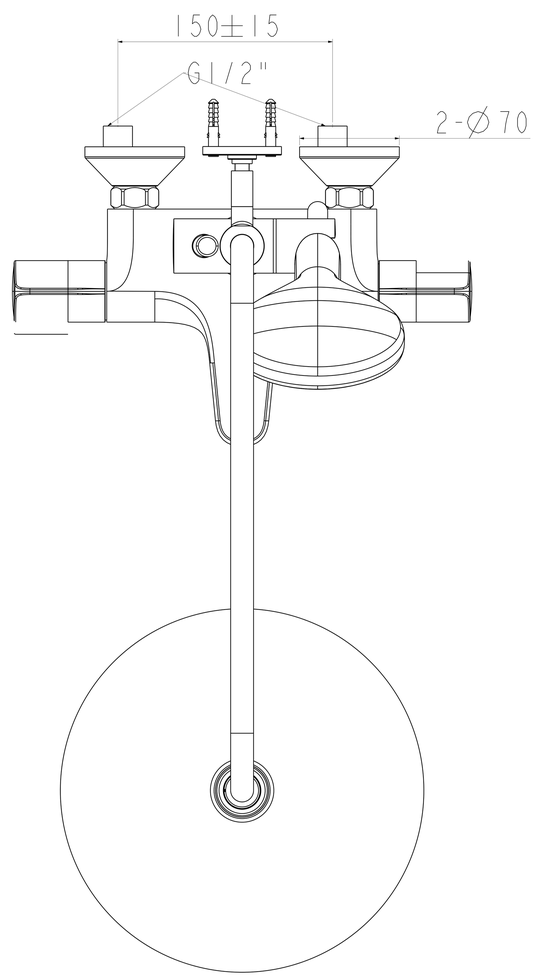
150±15
G1/2"
2-∅70