Toilet

American Standard

CL23275-6DACTEB4

Milano

Milano CC W/Pristine E-Bidet Side Panel

STYLE SEGMENT

- Contemporary

KEY SPECIFICATIONS

- Product Dimensions: 750 x 454 x 765
- Installation Type: Floor Mount
- Flushing System: Double Vortex
- Flushing Platform: Washdown
- Flushing Type: Dual flush
- Flushing Volume: 3/4.2
- Trapway: S Trap
- Rough In: 305
- Trapway Design: Concealed
- Bowl Shape: Elongated
- Water Pressure, Dynamic (MPa): 20 Psi
- Water Pressure, Static (MPa): 20 Psi
- Material: Vitreous China
- Color Availability: White Heat II



SHIPPING WEIGHT

- Net Weight: 69.5
- Gross Weight: 71

KEY TECHNOLOGIES AND FEATURES

HYGIENE

- Complies with American Standard Quality Standards

COMFORT

- Complies with American Standard Quality Standards

CONVENIENCE

- Complies with American Standard Quality Standards

DURABILITY

- Complies with American Standard Quality Standards

SUSTAINABILITY

- Complies with American Standard Quality Standards

SAFETY

- Complies with American Standard Quality Standards

OTHERS

- NIL

STANDARDS AND CERTIFICATIONS

- TIS 792-2554(2011)

American Standard

CL23275-6DACTEB4

Milano

Milano CC W/Pristine E-Bidet Side Panel

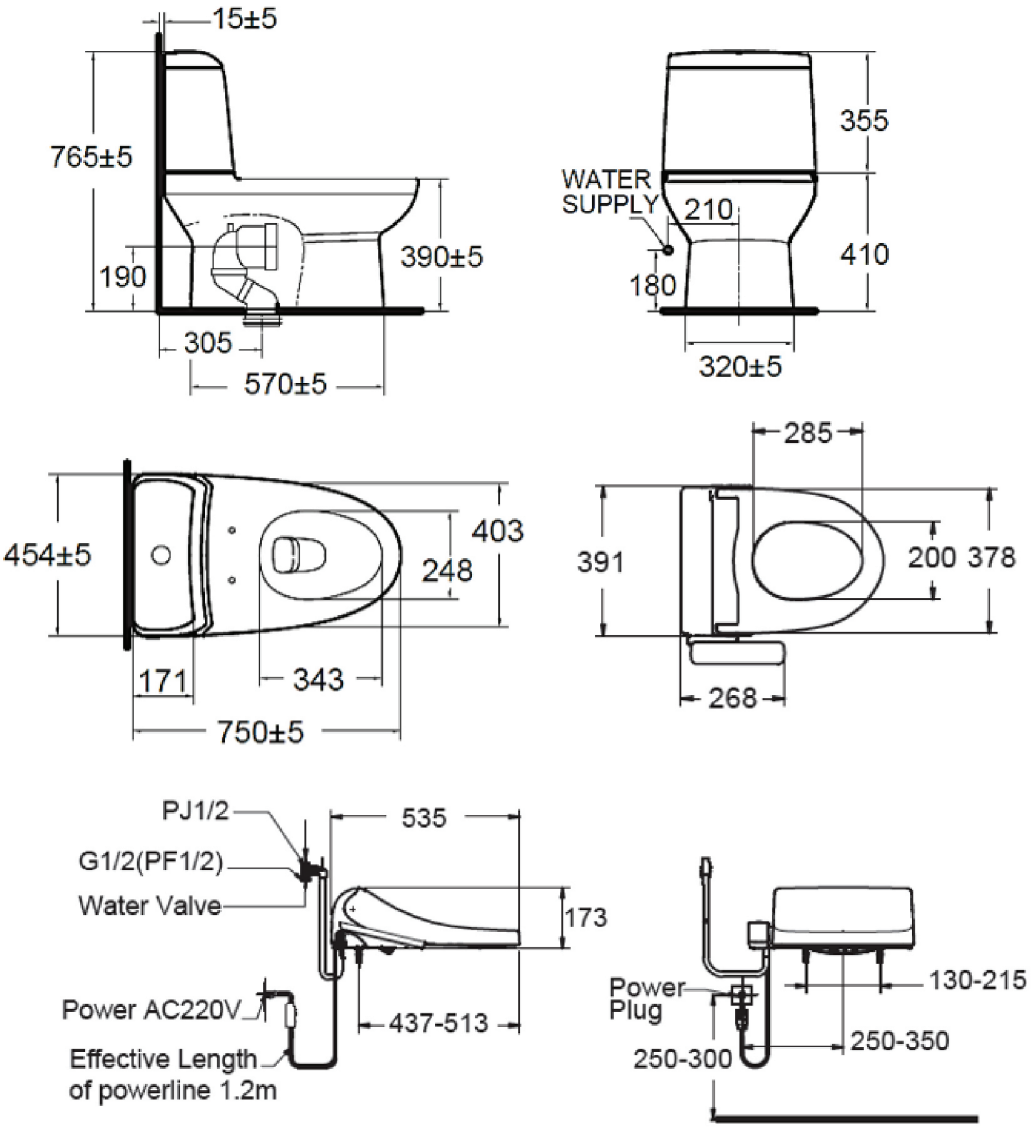

Toilet

American Standard

CL23275-6DACTEB4

Milano

Milano CC W/Pristine E-Bidet Side Panel

Item	Description	Milano CC W/Pristine E-Bidet Side Panel
Dimensions	Product (mm)	750 x 454 x 765
Material & Color	Material	Vitreous China
	Color	White Heat II
Bowl	Shape	Elongated
Trapway	Type	S Trap
	Rough-in (mm)	305
	Design	Concealed
Flushing	System	Double Vortex
	Type	Dual flush
	Platform	Washdown
	Volume	3/4.2
Water Pressure	Dynamic (MPa)	20 Psi
	Static (MPa)	20 Psi
Installation	Type	Floor Mount

Toilet

American Standard

CL23275-6DACTEB4

Milano

Milano CC W/Pristine E-Bidet Side Panel

Components	Toliet Seat Included	Yes
Shipping	Net Weight (kg)	69.5
	Gross Weight (kg)	71
	Product Weight (kg)	57.1
	Dimensions (mm)	595x1090x700