To ensure that your installation proceeds smoothly,
please read this instructions carefully before you begin.

American Standard

CYGNET

1097730000
CYGNET BASIN MIXER CHROME (4*)

1097740000
CYGNET EXT BASIN MIXER CP (4*)

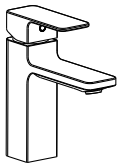

1097730000

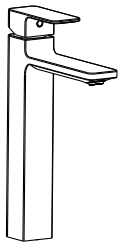

1097740000

Installation &
Operation Instruction

Dimension

Unit: mm

1097730000

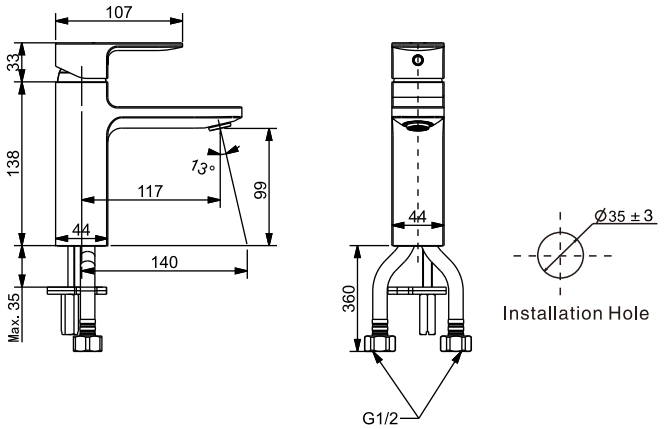

1097740000

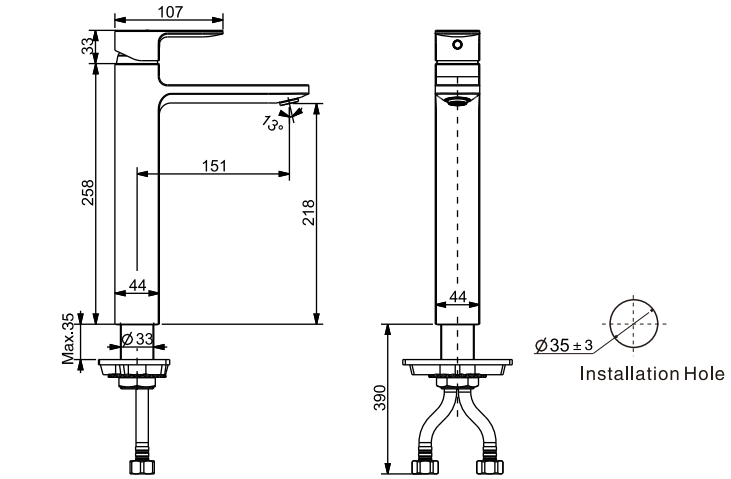

Installation

1 Preparation

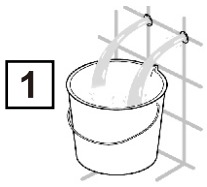

* Consult the dimension drawing and lay the pipes.
* Wash and clean the water supply pipeline.

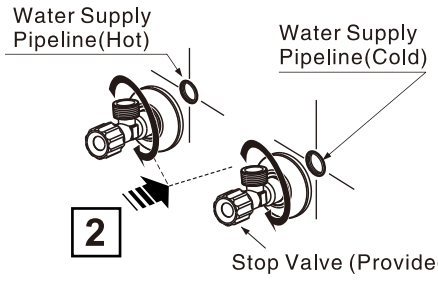

2 Faucet Installation

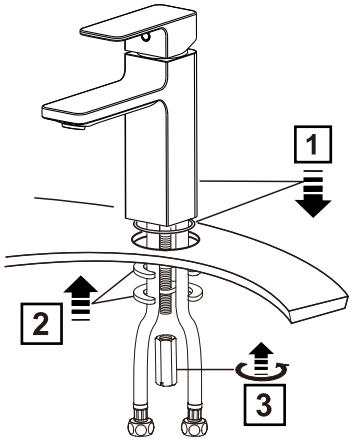

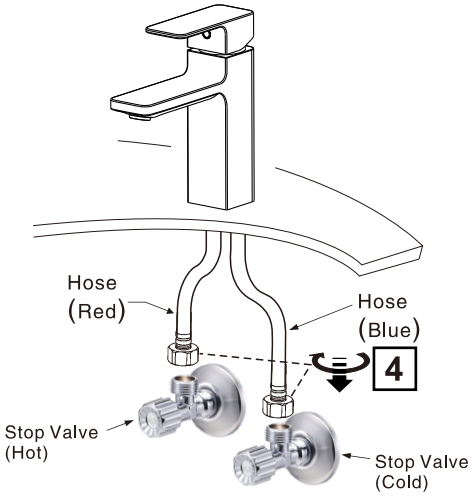

Parts List

1097730000

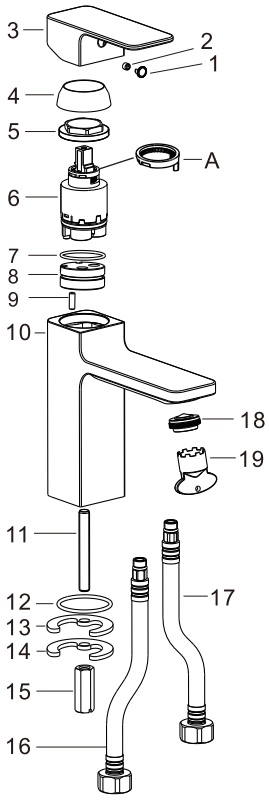

No.	Part Name	Q'ty
1	Index button	1
2	Screw	1
3	Handle	1
4	Cap	1
5	Nut	1
6	Cartridge	1
7	O–Ring	1
8	Seat	1
9	Pin	1
10	Body	1
11	Shank	1
12	Washer	1
13	Washer	1
14	Washer	1
15	Nut	1
16	Hose (Red)	1
17	Hose (Blue)	1
18	Aerator	1
19	Wrench	1
A	Temperature limiter	1

1097740000

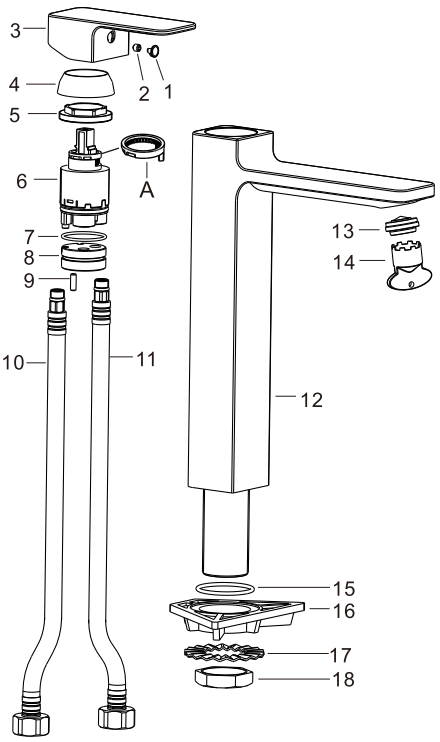

No.	Part Name	Q'ty
1	Index button	1
2	Screw	1
3	Handle	1
4	Cap	1
5	Nut	1
6	Cartridge	1
7	O–Ring	1
8	Seat	1
9	Pin	1
10	Hose (Red)	1
11	Hose (Blue)	1
12	Body	1
13	Aerator	1
14	Wrench	1
15	Washer	1
16	Holder	1
17	Washer	1
18	Nut	1
A	Temperature limiter	1

Operation instruction for temperature Limiter

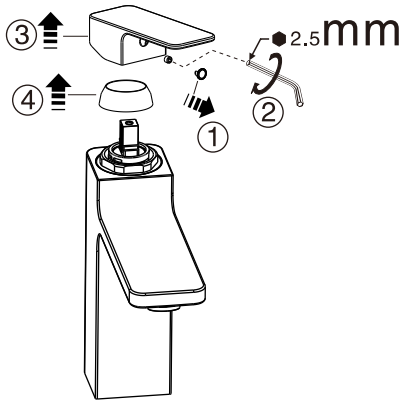

* Remove the handle and cover, you can see the cartridge.

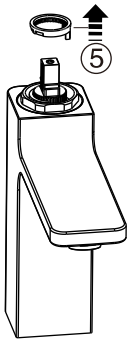

* Take out the temperature limiter.

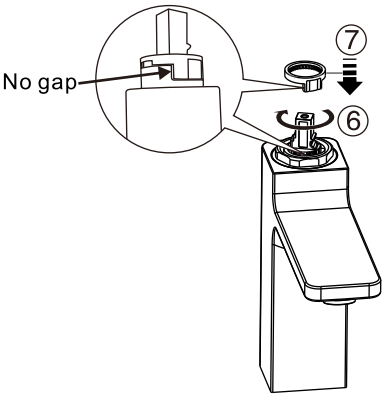

* Move the pivot of cartridge to the position of you wanted hot water temperature. Reinstall the temperature limiter with no gap as shown in the figure above.

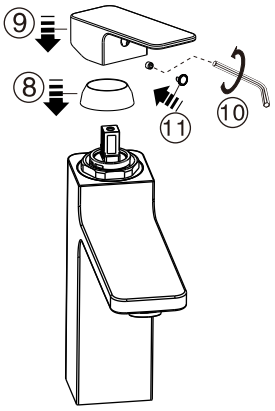

* Intall cap and handle.

Notice

- Mixer meets the lead free requirements of NCC vol 3
- Mixer must be installed to the requirement of AS/NZS 3500 by a qualified plumber
- Flush out new pipe work prior to connecting the new mixer
- Check installation distance in the dimension diagram to ensure correct installation

Conditions for use

- Recommended equal water pressure – 100Kpa to 500Kpa
- Maximum hot water temperature 65℃
- Flow controller must be tightened to prevent removal from hand

WATER RATING
www.waterrating.gov.au
7.5 litres per minute
In accordance with AS/NZS 6400
Licence No. 0050

Lead Free
AS 3718
WMKA21318