Wash Basin

American Standard

CL0452I-6DAWDLT

Concept

Concept Sphere Countertop 55Cm basin WT

STYLE SEGMENT

- Contemporary

KEY SPECIFICATIONS

- Installation Type: Wall Hung
- Product Dimensions: 550 x 455 x 200
- Material: Vitreous China
- Color: White
- Overflow Hole: With
- Faucet Ledge: Yes
- Included Components: Overflow Ring, Installation Manual



SHIPPING WEIGHT

- Net Weight: 12.82
- Gross Weight: 12.92

KEY TECHNOLOGIES AND FEATURES

HYGIENE

- Complies with American Standard Quality Standards

COMFORT

- Complies with American Standard Quality Standards

CONVENIENCE

- Complies with American Standard Quality Standards

DURABILITY

- Complies with American Standard Quality Standards

SUSTAINABILITY

- Complies with American Standard Quality Standards

SAFETY

- Complies with American Standard Quality Standards

OTHERS

- NIL

STANDARDS AND CERTIFICATIONS

- Complies with American Standard Quality Standards

Wash Basin

American Standard

CL0452I-6DAWDLT

Concept

Concept Sphere Countertop 55Cm basin WT

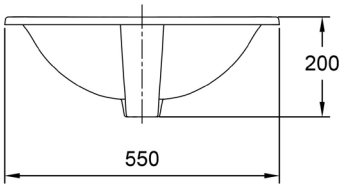

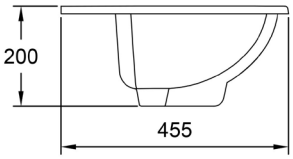

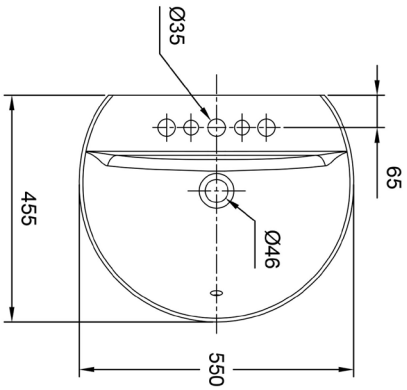

Wash Basin

American Standard

CL0452I-6DAWDLT

Concept

Concept Sphere Countertop 55Cm basin WT

Item	Description	Concept Sphere Countertop 55Cm basin WT
Installations	Type	Wall Hung
Dimensions	Product (mm)	550 x 455 x 200
Material & Color	Material	Vitreous China
	Color	White
Features	Overflow Hole	With
	Faucet Ledge	Yes
Components	Included	Overflow Ring, Installation Manual
Shipping	Net Weight (kg)	12.82
	Gross Weight (kg)	12.92
	Product Weight (kg)	12.82
	Dimensions (mm)	560 x 490 x 235