Basin Faucet

American Standard

F10901-CHACT

Milano

Milano Basin Mixer w/Pop-up drain & stop

STYLE SEGMENT

- Contemporary

KEY SPECIFICATIONS

- Product Description: Milano Basin Mixer With Pop-up Drain
- Colour: Chrome
- Faucet Type: Mixer
- No. of Faucet Holes Required: 1
- Flow Rate: 3.6
- Is Drain Included: Yes
- Connection Size (inches): G1/2



SHIPPING WEIGHT

- Net Weight: 1.7
- Gross Weight: 2

KEY TECHNOLOGIES AND FEATURES

HYGIENE

- Complies with American Standard Quality Standards

COMFORT

- ComfortMove

CONVENIENCE

- Complies with American Standard Quality Standards

DURABILITY

- Durashine

SUSTAINABILITY

- Water-Saving

SAFETY

- Low Lead

OTHERS

- NIL

STANDARDS AND CERTIFICATIONS

- TIS 2067-2552

Basin Faucet

American Standard

F10901-CHACT

Milano

Milano Basin Mixer w/Pop-up drain & stop

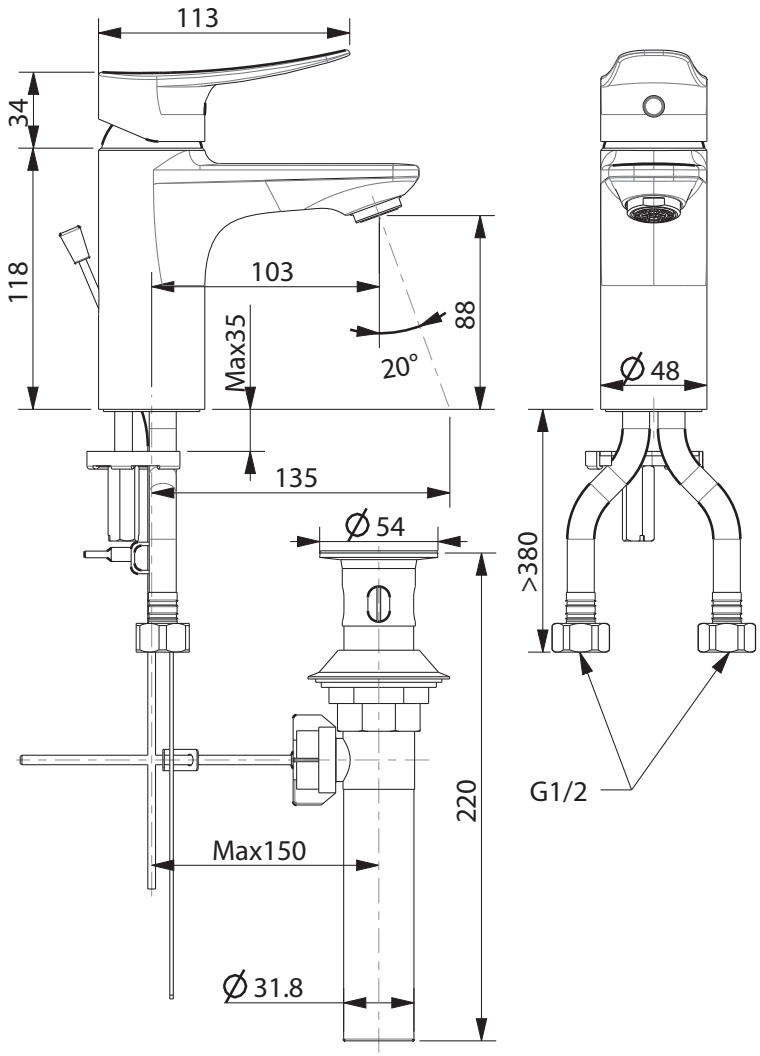

Basin Faucet

American Standard

F10901-CHACT

Milano

Milano Basin Mixer w/Pop-up drain & stop

Product	Description	Milano Basin Mixer With Pop-up Drain
	Weight (kg)	1.86
	Finish	Chrome
	Flow Rate	3.6
	Mounting Location	Deck Mount
Material & Color	Material	Brass
	Color	Chrome
Faucet	Type	Mixer
	No. of Holes Required	1
Connection	Size (mm)	DN15
	Size (inches)	G1/2
Handle	Material	Plastic/Brass
	Type	Lever
	No. of Handles	1
Components	Drain Included	Yes
	Included	N/A
	Excluded	N/A
Spout	Hose Thread in Spout	No
	Dimensions (mm)	Spout Reach: 103, Spout Height: 88
	Type	Ceramic
Valve	Type	Integrated