Shower Head

American Standard

FFASS056-000500BT0

Spectra

Spectra Touch-T





STYLE SEGMENT

- Contact us for more information

KEY SPECIFICATIONS

- Product Description: Touch Shower Head
- Showerhead Diameter: 183
- Material: Plastic
- Flow Rate: 7.6
- Shower Arm Connection Size (mm): G1/2
- Shower Arm Connection Type: G1/2
- Additional Components Included: 3 AA Batteries included for showerhead
- Shower Arm Included (Y/N): No

SHIPPING WEIGHT

- Net Weight: Contact us for more information
- Gross Weight: Contact us for more information

KEY TECHNOLOGIES AND FEATURES

HYGIENE

- EasyClean

COMFORT

- Complies with American Standard Quality Standards

CONVENIENCE

- Complies with American Standard Quality Standards

DURABILITY

- Durashine

SUSTAINABILITY

- Complies with American Standard Quality Standards

SAFETY

- Complies with American Standard Quality Standards

OTHERS

- NIL

STANDARDS AND CERTIFICATIONS

- GB/T 23447-2009

Shower Head

FFASS056-000500BT0

Spectra

Spectra Touch-T

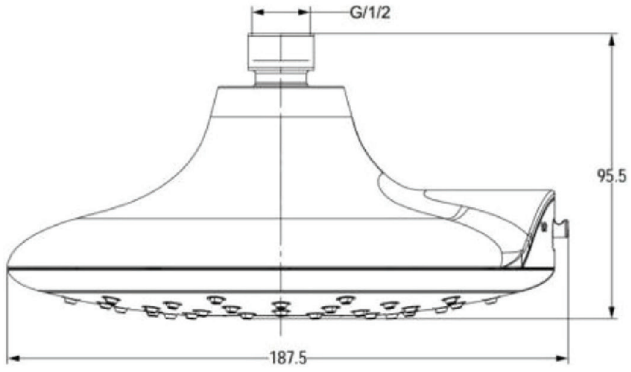

Shower Head

American Standard

FFASS056-000500BT0

Spectra

Spectra Touch-T

Product	Description	Contact us for more information
	Weight (kg)	1.1
	Material	Plastic
	Flow Rate	7.6
Showerhead	Diameter (mm)	183
Shower Arm	Connection Size (mm)	G1/2
	Connection Type	G1/2
	Included (Y/N)	No
	Type	N/A
Components	Additional Components Included	3 AA Batteries included for showerhead