Wash Basin

American Standard

CL0476I-6DAWDLT

Aqualyn

Aqualyn 1-Tap holes countertop lava WT

STYLE SEGMENT

- Contemporary

KEY SPECIFICATIONS

- Installation Type: Countertop
- Product Dimensions: 440 x 522 x 194
- Material: Vitreous China
- Color: White Heat II
- Overflow Hole: With
- Faucet Ledge: No
- Included Components: No components



SHIPPING WEIGHT

- Net Weight: 8.45
- Gross Weight: 12.5

KEY TECHNOLOGIES AND FEATURES

HYGIENE

- Complies with American Standard Quality Standards

COMFORT

- Complies with American Standard Quality Standards

CONVENIENCE

- Complies with American Standard Quality Standards

DURABILITY

- Complies with American Standard Quality Standards

SUSTAINABILITY

- Complies with American Standard Quality Standards

SAFETY

- Complies with American Standard Quality Standards

OTHERS

- NIL

STANDARDS AND CERTIFICATIONS

- TIS 791-2565

Wash Basin

American Standard

CL0476I-6DAWDLT

Aqualyn

Aqualyn 1-Tap holes countertop lava WT

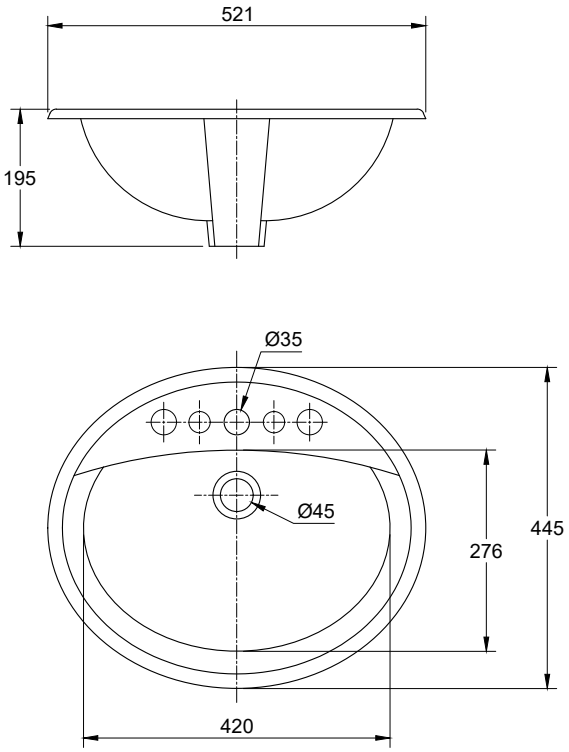

Wash Basin

American Standard

CL0476I-6DAWDLT

Aqualyn

Aqualyn 1-Tap holes countertop lava WT

Item	Description	AQUALYN
Installations	Type	Countertop
Dimensions	Product (mm)	440 x 522 x 194
Material & Color	Material	Vitreous China
	Color	White Heat II
Features	Overflow Hole	With
	Faucet Ledge	No
Components	Included	No components
Shipping	Net Weight (kg)	8.45
	Gross Weight (kg)	12.5
	Product Weight (kg)	8.45
	Dimensions (mm)	555x480x480