Wash Basin

American Standard

CL0740S-6DACT

Concept

Concept semi pedestal for 0552/0553 WT

STYLE SEGMENT

- Contemporary

KEY SPECIFICATIONS

- Installation Type: Semi-Pedestal
- Product Dimensions: 290x260x280
- Material: Vitreous China
- Color: White Heat II
- Overflow Hole: Without
- Faucet Ledge: No
- Included Components: Include



SHIPPING WEIGHT

- Net Weight: 7.7
- Gross Weight: 8.65

KEY TECHNOLOGIES AND FEATURES

HYGIENE

- Complies with American Standard Quality Standards

COMFORT

- Complies with American Standard Quality Standards

CONVENIENCE

- Complies with American Standard Quality Standards

DURABILITY

- Complies with American Standard Quality Standards

SUSTAINABILITY

- Complies with American Standard Quality Standards

SAFETY

- Complies with American Standard Quality Standards

OTHERS

- NIL

STANDARDS AND CERTIFICATIONS

- TIS 791-2565

Wash Basin

American Standard

CL0740S-6DACT

Concept

Concept semi pedestal for 0552/0553 WT

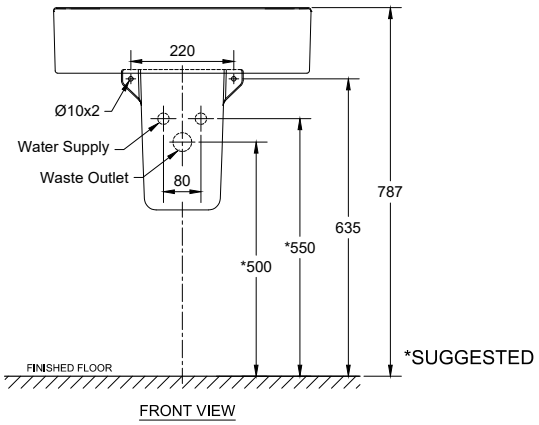

FRONT VIEW

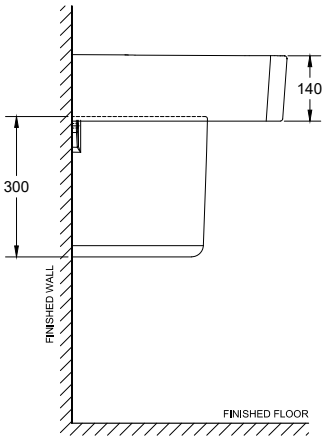

SIDE VIEW

Wash Basin

American Standard

CL0740S-6DACT

Concept

Concept semi pedestal for 0552/0553 WT

Item	Description	Concept
Installations	Type	Semi-Pedestal
Dimensions	Product (mm)	290x260x280
Material & Color	Material	Vitreous China
	Color	White Heat II
Features	Overflow Hole	Without
	Faucet Ledge	No
Components	Included	Include
Shipping	Net Weight (kg)	7.7
	Gross Weight (kg)	8.65
	Product Weight (kg)	7.7
	Dimensions (mm)	302x327x324