Toilet

American Standard

CL20245-6DACTST

Compact Codie

New Codie II 4.5/3L Top push Comp.set WT

STYLE SEGMENT

- Contemporary



KEY SPECIFICATIONS

- Product Dimensions: 710 x 324 x 712
- Installation Type: Floor Mounted
- Flushing System: Washdown
- Flushing Platform: Washdown
- Flushing Type: Dual flush
- Flushing Volume: 3-4.5
- Trapway: S Trap
- Rough In: 305
- Trapway Design: Concealed
- Bowl Shape: Elongated
- Water Pressure, Dynamic (MPa): 0.137
- Water Pressure, Static (MPa): N/A
- Material: Vitreous China
- Color Availability: White

SHIPPING WEIGHT

- Net Weight: 43.8
- Gross Weight: 52.7

KEY TECHNOLOGIES AND FEATURES

HYGIENE

- Complies with American Standard Quality Standards

COMFORT

- Right Height

CONVENIENCE

- Slow-Closing Seat & Cover

DURABILITY

- Complies with American Standard Quality Standards

SUSTAINABILITY

- Water-Saving
- Dual Flush

SAFETY

- Complies with American Standard Quality Standards

OTHERS

- NIL

STANDARDS AND CERTIFICATIONS

- TIS 792-2554(2011)

American Standard

CL20245-6DACTST

Compact Codie

New Codie II 4.5/3L Top push Comp.set WT

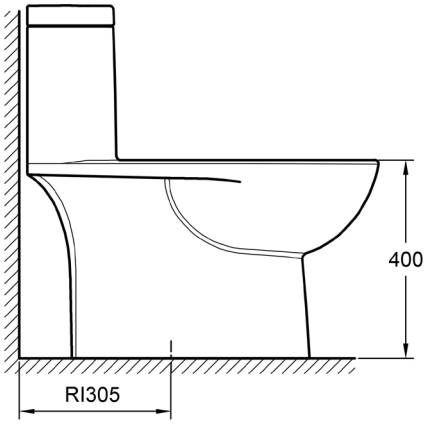

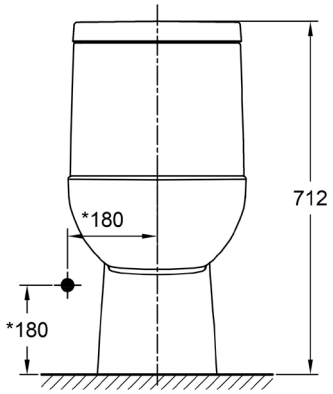

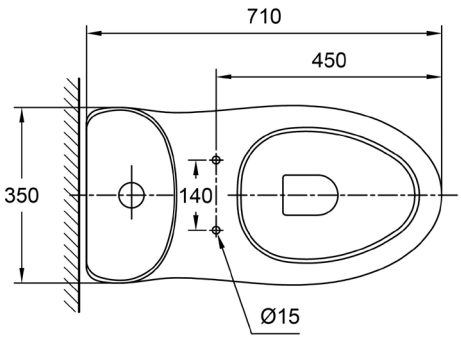

American Standard

CL20245-6DACTST

Compact Codie

New Codie II 4.5/3L Top push Comp.set WT

Item	Description	NEW CODIE II PLUS OP 305 mm. TOILET WITH CERAMIC TRAP
Dimensions	Product (mm)	710 x 324 x 712
Material & Color	Material	Vitreous China
	Color	White
Bowl	Shape	Elongated
Trapway	Type	S Trap
	Rough-in (mm)	305
	Design	Concealed
Flushing	System	Washdown
	Type	Dual flush
	Platform	Washdown
	Volume	3-4.5
Water Pressure	Dynamic (MPa)	0.137
	Static (MPa)	N/A
Installation	Type	Floor Mounted

Toilet

American Standard

CL20245-6DACTST

Compact Codie

New Codie II 4.5/3L Top push Comp.set WT

Components	Toliet Seat Included	Yes
Shipping	Net Weight (kg)	43.8
	Gross Weight (kg)	52.7
	Product Weight (kg)	40
	Dimensions (mm)	750 x 420 x 705