Basin Faucet

American Standard

FFASB201-1T1501BT0

Codie

Codie Basin Mixer W/o Pop-up-Thailand

STYLE SEGMENT

- Contact us for more information

KEY SPECIFICATIONS

- Product Description:
- Codie Basin Mixer W/o Pop-up - Thailand
- Colour: Chrome
- Faucet Type: Mixer
- No. of Faucet Holes Required: 1
- Flow Rate: 3.24
- Is Drain Included: No
- Connection Size (inches): Contact us for more information



SHIPPING WEIGHT

- Net Weight: Contact us for more information
- Gross Weight: Contact us for more information

KEY TECHNOLOGIES AND FEATURES

HYGIENE

- Complies with American Standard Quality Standards

COMFORT

- ComfortMove

CONVENIENCE

- Complies with American Standard Quality Standards

DURABILITY

- Durashine

SUSTAINABILITY

- Water-Saving

SAFETY

- Complies with American Standard Quality Standards

OTHERS

- NIL

STANDARDS AND CERTIFICATIONS

- GB 18145-2014
- TIS 2067-2544

Basin Faucet

FFASB201-1T1501BT0

Codie

Codie Basin Mixer W/o Pop-up-Thailand

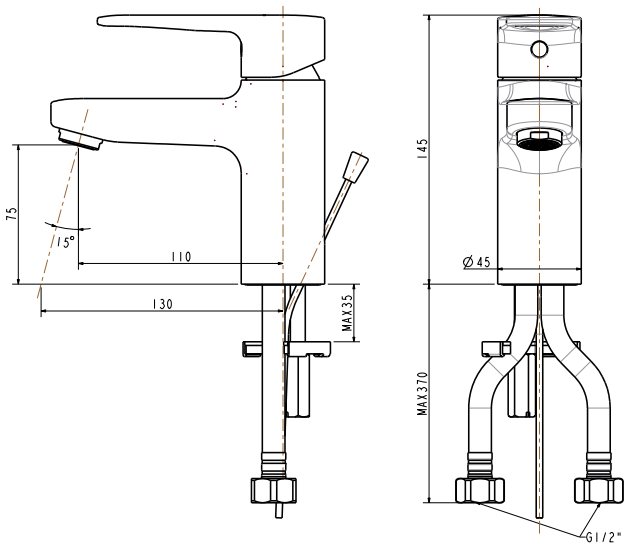

Basin Faucet

American Standard

FFASB201-1T1501BT0

Codie

Codie Basin Mixer W/o Pop-up-Thailand

Product	Description	Codie Basin Mixer W/o Pop-up - Thailand
	Weight (kg)	1.58
	Finish	Chrome
	Flow Rate	3.24
	Mounting Location	Deck Mount
Material & Color	Material	Brass
	Color	Chrome
Faucet	Type	Mixer
	No. of Holes Required	1
Connection	Size (mm)	Contact us for more information
	Size (inches)	Contact us for more information
Handle	Material	Contact us for more information
	Type	Lever
	No. of Handles	1
Components	Drain Included	No
	Included	Contact us for more information
	Excluded	Contact us for more information
Spout	Hose Thread in Spout	Contact us for more information
	Dimensions (mm)	Spout Reach: 110 , Spout Height: 75
	Type	Ceramic
Valve	Type	Contact us for more information