Basin Faucet

American Standard

FFASTJ57-1T1500BT0

Loft

Loft Mono Basin Faucet

STYLE SEGMENT

- Transitional

KEY SPECIFICATIONS

- Product Description: Loft Mono Basin Faucet
- Colour: Chrome
- Faucet Type: Mono
- No. of Faucet Holes Required: 1
- Flow Rate: 3.03
- Is Drain Included: No
- Connection Size (inches): G1/2



SHIPPING WEIGHT

- Net Weight: 1
- Gross Weight: 1.2

KEY TECHNOLOGIES AND FEATURES

HYGIENE

- Complies with American Standard Quality Standards

COMFORT

- Complies with American Standard Quality Standards

CONVENIENCE

- Complies with American Standard Quality Standards

DURABILITY

- Complies with American Standard Quality Standards

SUSTAINABILITY

- Complies with American Standard Quality Standards

SAFETY

- Complies with American Standard Quality Standards

OTHERS

- NIL

STANDARDS AND CERTIFICATIONS

- TIS 2067-2552

Basin Faucet

American Standard

FFASTJ57-1T1500BT0

Loft

Loft Mono Basin Faucet

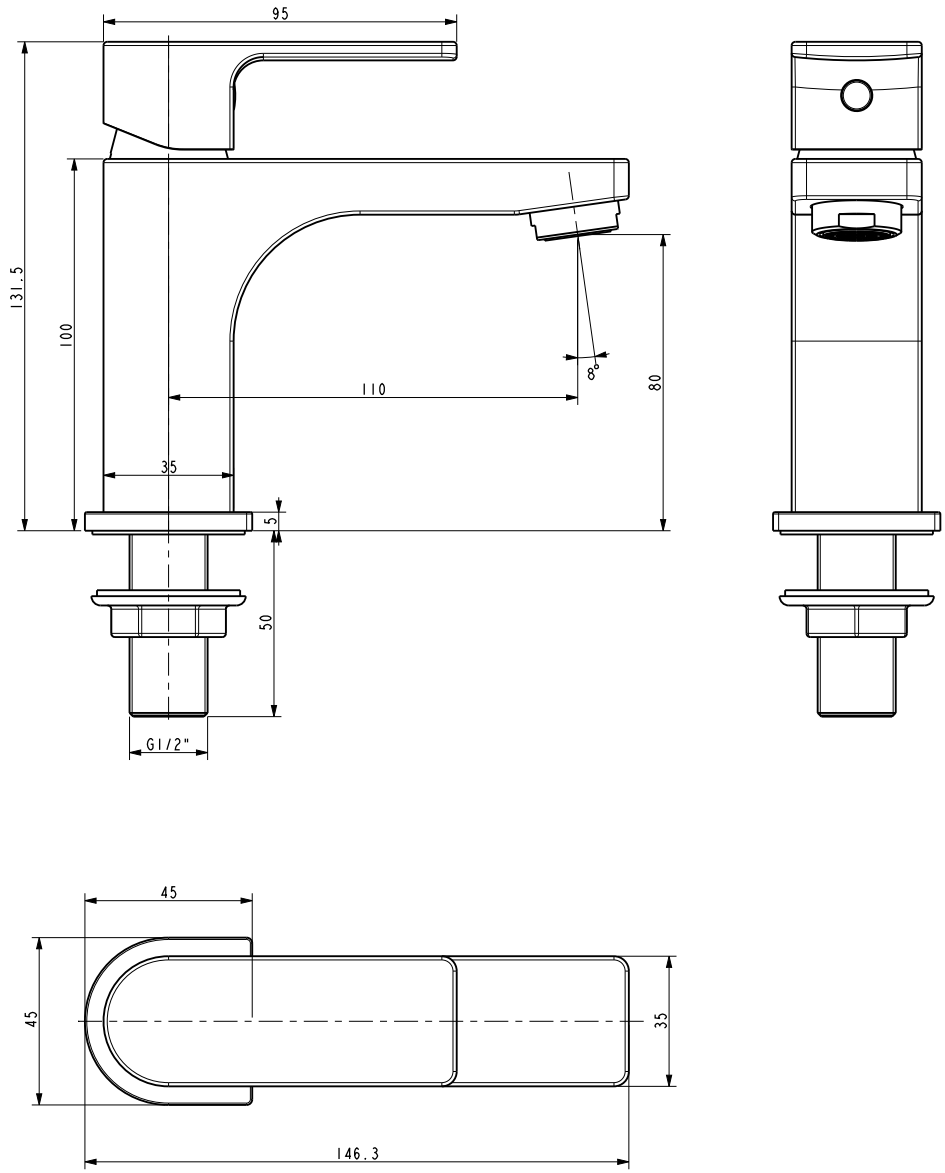

Basin Faucet

American Standard

FFASTJ57-1T1500BT0

Loft

Loft Mono Basin Faucet

Product	Description	Loft Mono Basin Faucet
	Weight (kg)	1
	Finish	Chrome
	Flow Rate	3.03
	Mounting Location	Deck Mount
Material & Color	Material	Brass
	Color	Chrome
Faucet	Type	Mono
	No. of Holes Required	1
Connection	Size (mm)	DN15
	Size (inches)	G1/2
Handle	Material	Zinc Die Cast
	Type	Lever
	No. of Handles	1
Components	Drain Included	No
	Included	N/A
	Excluded	N/A
Spout	Hose Thread in Spout	No
	Dimensions (mm)	146
	Type	Ceramic
Valve	Type	Standard