Shower Kit

American Standard

F40015-CHADY

Others

Slide Bar with Soap Dish + iColor Chrome Hand Shower & Hose

STYLE SEGMENT

- Contemporary

KEY SPECIFICATIONS

- Product Description: Slide Bar with Soap Dish + iColor Chrome Hand Shower & Hose
- Product Dimensions: 63 x 685 x 120
- Flow Rate: 5
- Showerhead Diameter: 120
- Showerhead Material: N/A
- Showerhead Flow Rate: 5 L/Min
- Connection Size (mm): G1/2
- Includes Bathroom Faucet: No
- Bath Shower: Rough-in Valve Connection Size: G1/2
- Body Shower Included: No
- Base Finish: Chrome
- Base Material: Brass
- Additional Components Included: Hand Shower & Hose



SHIPPING WEIGHT

- Net Weight: Contact us for more information
- Gross Weight: Contact us for more information

KEY TECHNOLOGIES AND FEATURES

HYGIENE

- Complies with American Standard Quality Standards

COMFORT

- Complies with American Standard Quality Standards

CONVENIENCE

- TWISTFREE

DURABILITY

- Durashine

SUSTAINABILITY

- Complies with American Standard Quality Standards

SAFETY

- Complies with American Standard Quality Standards

OTHERS

- NIL

STANDARDS AND CERTIFICATIONS

- TIS 2067-2552

Shower Kit

F40015-CHADY

Others

Slide Bar with Soap Dish + iColor Chrome Hand Shower & Hose

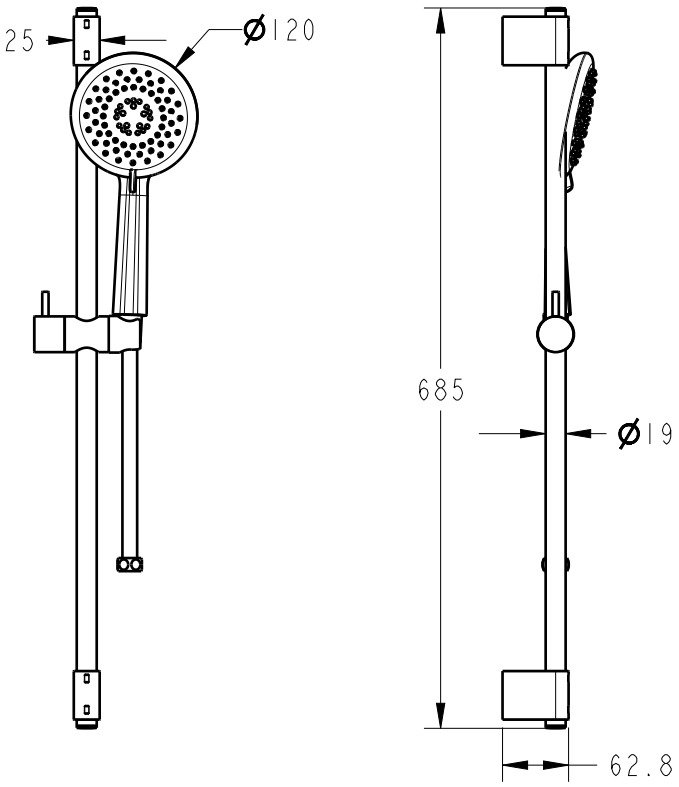

Shower Kit

American Standard

F40015-CHADY

Others

Slide Bar with Soap Dish + iColor Chrome Hand Shower & Hose

Product	Description	Slide Bar with Soap Dish + iColor Chrome Hand Shower & Hose
	Weight (kg)	0.74
	Dimensions (mm)	63 x 685 x 120
	Finish	Chrome
	Material	Brass
	Flow Rate	5
Showerhead	Face Diameter (mm)	120
	Flow Rate	5 L/Min
	Included	Yes
	Material	N/A
Connection	Size (mm)	G1/2
	Size (inches)	G1/2
Components	Additional Components Included	Hand Shower & Hose
	Body Shower Included	No
	Hand Shower Included	Yes
	Includes Bathroom Faucet	No
	Includes Handle	No
	Excluded	Showerhead
Rough In Valve	Included	No
	Compatible Type	N/A
	Bath Shower: Rough-in Valve Connection Size (mm)	G1/2