ASBFA00000500A

Toilet Seat Installation Manual and Operating Instructions

Version:1. 5

Thank you for choosing our product.

Please read carefully the following installation instructions in order to avoid component damage or injury to the installer.
Keep the installation manual available for future maintenance or reference.

PRECAUTIONS: Follow all safety precautions to avoid bodily injury or damage to property.

⊘ ″Prohibited activities″

PRECAUTIONS

- Do not stand or place heavy objects on the seat cover. The weight could damage the seat and cover and may cause fall.



- Do not use strong abrasive cleansers, as they will scratch and dull the surface. Clean the outside surface of your toilet seat with mild soap water. Wipe the entire surface completely dry with a clean and soft cloth.

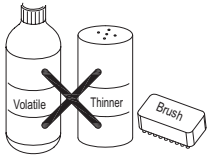

- Keep children out of reach of the seat, to avoid body injury.



Installation Instructions

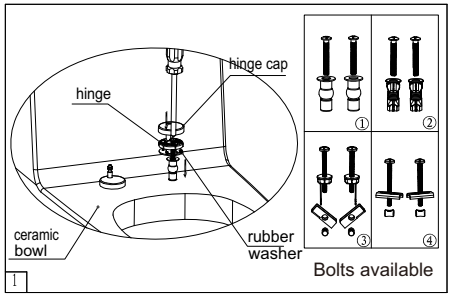

1. Insert rubber expansion nut into bowl bolt holes, then install hinge and bolt into hinge holes.
Using screwdriver to tighten the bolt into rubber expansion nuts and close the caphinge.

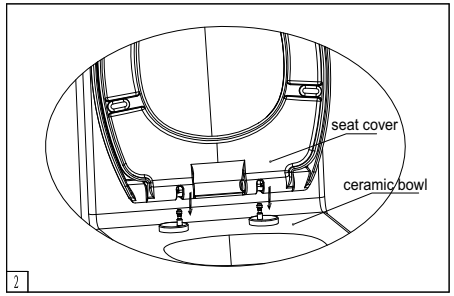

2. Attach the seat cover into hinge bar as per drawing.

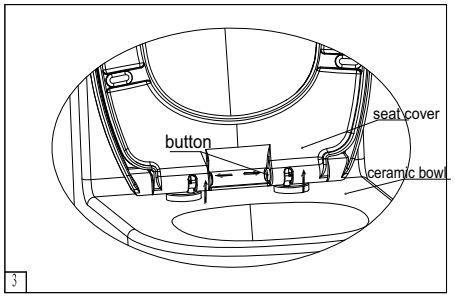

3. Slightly press the hinge cap, lift the seat cover to separate from hinge.

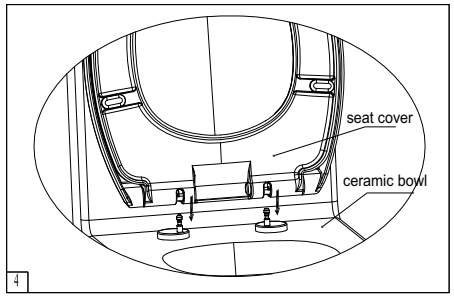

4. Close the hinge cap and re-attach the seat into hinge.

Care Instructions

Do not open/close the seat cover using excessive force.（Doing so may cause cracks or failure of performance.）

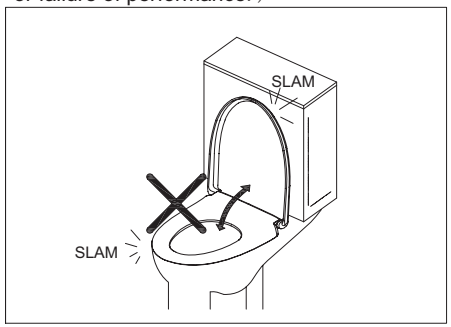

Do not expose the product to direct sunlight.（Doing so may cause color fading.）

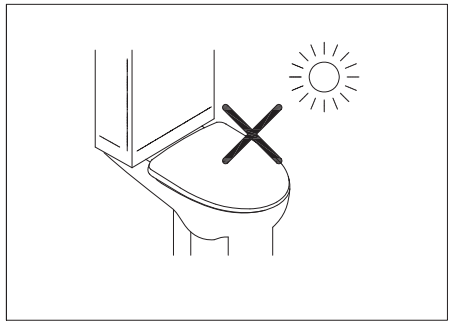

- The seat is available with optional slow close and non slow close function.

※ The closing speed of seat with slow close function can vary with the changing of room temperature and use cycles.
※ The seat without slow close function should be opened manually to fully open position or fully closed position to avoid injuries.

Maintenance Instructions

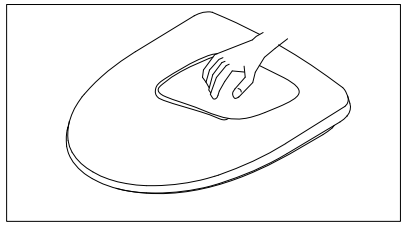

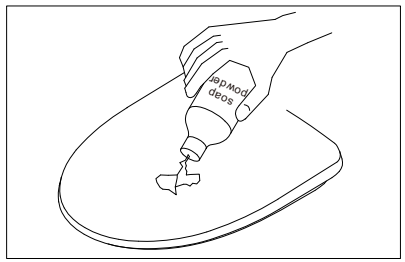

1. Periodical maintenance

- Wash the toilet seat with soft wet cloth.
- Dry with soft dry cloth.

2. Removal of stains

- Use neutral detergent(e.g. soap powder) to wipe softly, then dry with clean cloth.
- Do not use eradicator, abrasive powder, diluent, volatile oil, acid or alkali liquid detergent and nylon brush to clean the product, to avoid damage.